PIONEER
The future of sound and vision.

Service Manual

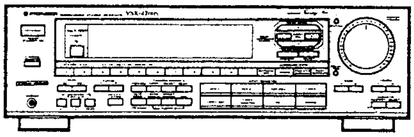

ORDER NO.
ARP2099

AUDIO/VIDEO STEREO RECEIVER

VSX-4700S

- **This manual is applicable to the VSX−4700S/HEZ type.**
- **Ce manuel pour le service comprend les explications de réglage en français.**
- **Este manual de servicio trata del método ajuste escrito en español.**

CONTENTS

1. SPECIFICATIONS ········ 2
2. EXPLODED VIEWS,PACKING AND PARTS LIST ········ 3
3. SCHEMATIC DIAGRAM ········ 7
4. P.C.BOARDS CONNECTION DIAGRAM ········ 15
5. PCB 's PARTS LIST ········ 29
6. ADJUSTMENTS ········ 35
6. RÉGLAGE ········ 37
6. AJUSTE ········ 39
7. IC INFORMATION ········ 41
8. REMOTE CONTROL UNIT (CU−VSX016: AXD1154) ········ 45
9. PANEL FACILITIES ········ 50

PIONEER ELECTRONIC CORPORATION 4-1, Meguro 1-Chome, Meguro-ku, Tokyo 153, Japan
PIONEER ELECTRONICS SERVICE INC. P.O. Box 1760, Long Beach, California 90801 U.S.A.
PIONEER ELECTRONICS OF CANADA, INC. 505 Cochrane Drive, Markham, Ontario L3R 8E3 Canada
PIONEER ELECTRONIC [EUROPE] N.V. Keetberglaan 1, 2740 Beveren, Belgium
PIONEER ELECTRONICS AUSTRALIA PTY. LTD. 178-184 Boundary Road, Braeside, Victoria 3195, Australia TEL: [03] 580-9911

© PIONEER ELECTRONIC CORPORATION 1990

YQ AUG. 1990 Printed in Japa-

1. SPECIFICATIONS

Amplifier section

[POWER AMP IN]

Continuous average power output of 105 watts* per channel, min., at 8 ohms, from 20 Hz to 20,000 Hz with no more than 0.008 % total harmonic distortion (front).**

Continuous power output (rear)	20 W + 20 W (1 kHz, T.H.D. 0.08%**, 8Ω)
Dynamic Power (2 Ω/4 Ω/8 Ω)	230 W/200 W/150 W
Input (Sensitivity/Impedance)	
PHONO MM	2.5 mV/47 kΩ
CD, TAPE 1/DAT, TAPE 2, VDP/CDV, VCR 1, VCR 2	150 mV/47 kΩ
FRONT POWER AMP IN	1 V/47 kΩ
Phono Overload Level (T.H.D. 0.08 %, 1000 Hz)**	
PHONO MM	130 mV
Frequency Response	
PHONO MM	20 Hz to 20,000 Hz ±0.3 dB
CD, TAPE 1/DAT, TAPE 2, VDP/CDV, VCR 1, VCR 2	5 Hz to 100,000 Hz $^{+0}_{-3}$ dB
Output (Level/Impedance)	
TAPE 1/DAT REC, TAPE 2 REC	150 mV/2.2 kΩ
VCR 1 OUT, VCR 2 OUT	150 mV/2.2 kΩ
PRE AMP OUT	1 V/470Ω
Tone Control	
BASS 100 Hz	±8 dB
TREBLE 10 kHz	±8 dB
Loudness Contour	6 dB (100 Hz) 3 dB (10 kHz)
Signal-to-Noise Ratio (IHF, short circuited, A network)	
PHONO MM	73 dB
CD, TAPE 1/DAT, TAPE 2, VDP/CDV, VCR 1, VCR 2	98 dB
Signal-to-Noise Ratio [EIA, at 1 W (1 kHz)]	
PHONO MM	75 dB
CD, TAPE 1/DAT, TAPE 2, VDP/CDV, VCR 1, VCR 2	80 dB

* *Measured pursuant to the Federal Trade Commission's Trade Regulation rule on Power Output Claims for Amplifier.*

** *Measured by Audio Spectrum Analyzer.*

VIDEO Section

Input (Sensitivity/Impedance)	
VCR 1, VCR 2, VDP/CDV	1 Vp-p/75Ω
Output (Level/Impedance)	
VCR 1, VCR 2, MONITOR	1 Vp-p/75Ω
Frequency Response	
VCR 1, VCR 2, VDP/CDV→MONITOR	5 Hz – 10 MHz $^{+0}_{-3}$ dB
Signal to Noise Ratio	55 dB
Cross Talk	55 dB

FM Tuner Section

Frequency Range	87.5 MHz to 108 MHz
Usable Sensitivity	Mono; 10.8 dBf, IHF (0.95 μV/75 Ω)
50 dB Quieting Sensitivity	Mono; 15.3 dBf, (1.6 μV/75 Ω) Stereo; 37.0 dBf, (19.5 μV/75 Ω)
Signal-to-Noise Ratio	Mono; 80 dB (at 65 dBf) Stereo; 76 dB (at 85 dBf)
Distortion	Mono; 0.2 % (1 kHz) Stereo; 0.3 % (1 kHz)
Capture Ratio	1 dB
Alternate Channel Selectivity	65 dB (400 kHz)
Stereo Separation	45 dB (1 kHz)
Frequency Response	30 Hz to 15 kHz ($^{+0.5}_{-2.0}$)dB
Image Interference Ratio	50 dB
IF Interference Ratio	80 dB
Antenna Input	300 Ω balanced 75 Ω unbalanced

AM Tuner Section

Frequency range	530 kHz – 1,700 kHz
Sensitivity (IHF, Loop antenna)	300 μV/m
Selectivity	25 dB
Signal-to-Noise Ratio	50 dB
Antenna	Loop antenna

Miscellaneous

Power requirements	AC 120V, 60 Hz
Power consumption	400 W, 510 VA
In standby condition	3 W
AC Outlets	
SWITCHED x 2	TOTAL 100 W MAX
UNSWITCHED x 1	200 W MAX
Dimensions	420 (W) x 125.5 (H) x 395 (D) mm 16-7/16 (W) x 4-15/16 (H) x 15-9/16 (D) in
Weight (without package)	9.5 kg (21 lb)

Furnished Parts

FM T-type antenna	1
AM Loop antenna	1
Dry cell batteries	
VSX-4700S size "AAA" (LR03/AM-4) Alkaline	4
VSX-4600 size "AAA" (R03/UM-4)	2
Remote control unit	1
Operating Instructions	1
Templates (VSX-4700S)	2

NOTE:
Specifications and the design subject to possible modifications without notice due to improvements.

Manufactured under license from Dolby Laboratories Licensing Corporation. Additionally licensed under one or more of the following patents: U.S. numbers 3,632,886, 3,746,792 and 3,959,590; CANADA numbers 1,004,603 and 1,037,877. "Dolby" and the double-D symbol ᗡᗞ are trademarks of Dolby Laboratories Licensing Corporation.

Manufacturé sous licence de Dolby Laboratories Licensing Corporation. En outre, sous license d'un ou plusiers des brevets suivants: numéros américains 3,632,886, 3,746,792 et 3,959,590; numéros canadiens 1,004,603 et 1,037,877. Le terme "Dolby" et le symbole Double-D sont des marques déposées de Dolby Laboratories Licensing Corporation.

2. EXPLODED VIEWS,PACKING AND PARTS LIST

NOTES:

- *Parts without part number cannot be supplied.*
- *The ⚠ mark found on some component parts indicates the importance of the safety factor of the part. Therefore, when replacing, be sure to use parts of identical designation.*
- *Parts marked by "◉" are not always kept in stock. Their delivery time may be longer than usual or they may be unavailable.*

Parts list of Exterior and Packing

Mark	No.	Description	Parts No.
	1	MASTER VOL ASSY	AAB1119
	2	LIGHT ACTION KNOB	AAD1398
	3	SP SELECTOR BUTTON	AAD1587
	4	STATION BUTTON	AAD1588
	5	SURROUND MODE BUTTON	AAD1589
	6	FUNCTION BUTTON	AAD1590
	7	FUNCTION BUTTON	AAD1591
	8	PRIMARY ASSEMBLY	
	9	PANEL	AAK2013
	10	FL FILTER	AAK2014
	11	NAME PLATE (METAL)	AAM1029
	12	AMP ASSEMBLY	AWH1008
	13	SURR ASSEMBLY	AWX1031
	14	SCREW (STEEL)	ABA-297
	15	SCREW	ABA-298
	16	SCREW (STEEL)	ABA1006
	17	SCREW (STEEL)	ABA1011
	18	SCREW (STEEL)	ABA1047
	19	SCREW (STEEL)	ABA1093
	20	NUT	ABN-065
	21	AC POWER CORD	ADG1021
	22	FM ANTENNA	ADH1002
	23	CUSHION (RUBBER)	
	24	MICA SHEET	AEC-818
	25	PIN GROMMET	
	26	BARRIER	
	27	PCB SPACER	AEC1273
	28	CUSHION	
	29	REAR SP ASSEMBLY	
	30	CLAMPER	
	31	MICA SHEET	AEP-313
	32	....	
	33	STYROL PROTECTOR	AHA1020
	34	STYROL PROTECTOR	AHA1021
	35	PACKING CASE	AHD1868
	36	MAIN ASSEMBLY	AWZ3123
	37	PACKING SHEET	AHG1016
	38	TERMINAL SCREW	
	39	....	
	40	PANEL BASE	AMB1516
	41	INSULATOR ASSY	AMR1434
	42	INSULATOR ASSY	AMR1435
	43	CHASSIS	
	44	FRONT PANEL	ANB1406
	45	REAR PANEL	
	46	BONNET COVER	AZN1934
	47	BOTTOM PLATE	
	48	SUB TRANS BRACKET	
	49	PCB PLATE	
	50	HEAT SINK PLATE	
	51	HEAT SINK	
	52	OPERATING INSTRUCTIONS	ARC1239
	53	OPERATING INSTRUCTIONS	ARE1179
	54	TUNER ASSEMBLY	AWE1184
	55	FE ASSEMBLY	AWB1004
	56	SP.SW ASSEMBLY	
	57	FRONT ASSEMBLY	AWZ3158
	58	REMOTE CONTROL UNIT	AXD1154
	59	SCREW	BBZ26P080FMC
	60	SCREW	FBT40P080FZK
	61	SCREW	PBZ25P100FMC
	62	SCREW	VMZ30P060FMC
⚠	63	FUSE (T2.5A, FU1)	AEK-403
⚠	64	FUSE (T2.5A, FU3)	AEK-403
⚠	65	FUSE (T2.5A, FU4)	AEK-403
	66	LOOP ANTENNA	ATB1005
⚠	67	TRANSISTOR (Q1)	2SC3281
⚠	68	TRANSISTOR (Q2)	2SC3281
⚠	69	TRANSISTOR (Q3)	2SA1302
⚠	70	TRANSISTOR (Q4)	2SA1302
⚠	71	TRANSISTOR (Q5)	2SA1263N
⚠	72	TRANSISTOR (Q6)	2SC3180N
⚠	73	POWER TRANSFORMER (T1)	ATS1303
	74	EQ ASSEMBLY	
	75	REAR AMP ASSEMBLY	
	76	VOL ASSEMBLY	
	77	SP A, B ASSEMBLY	

Exterior

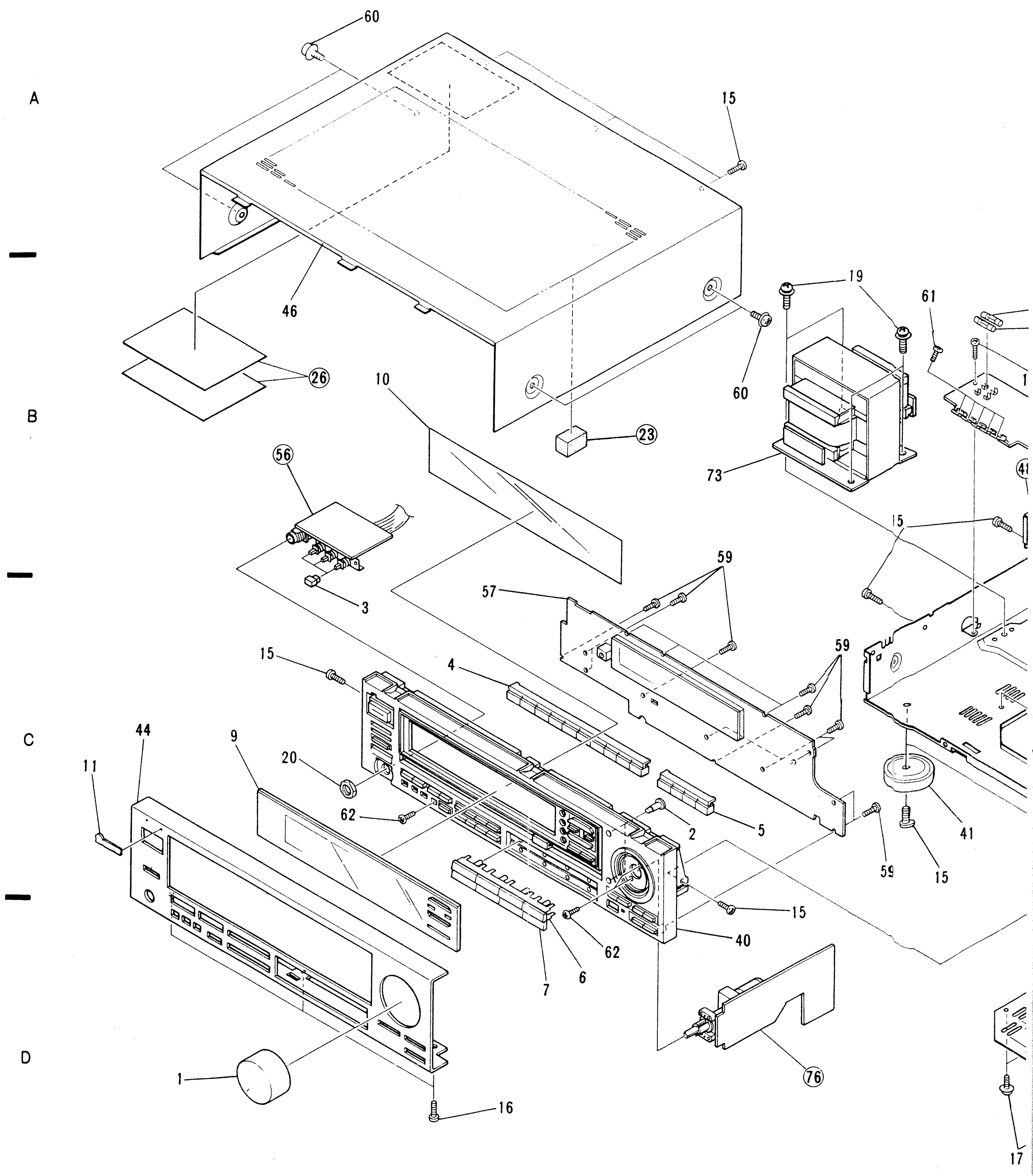

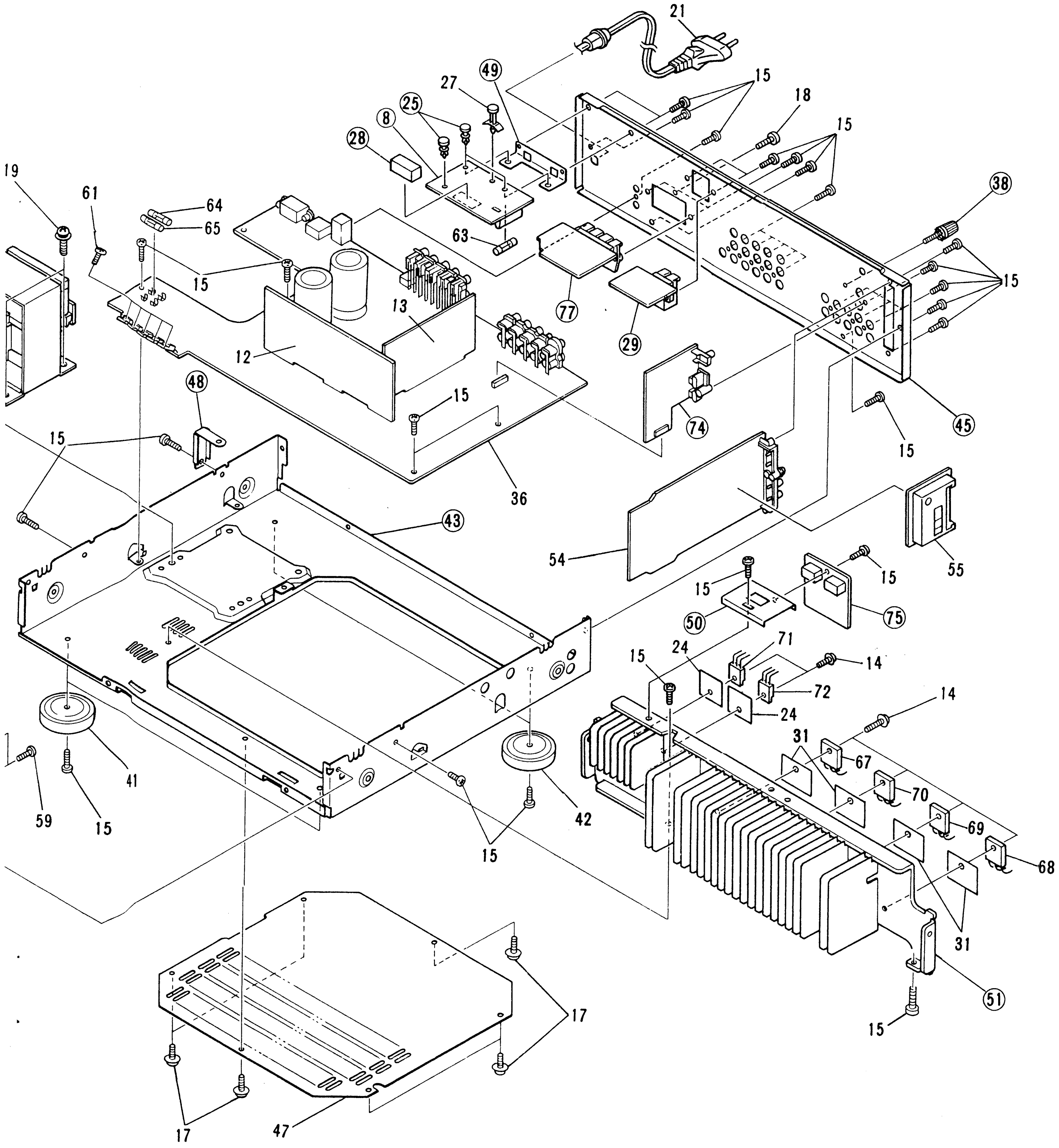
㊾
㉕
⑧
㉘
㊳
(77)
㉙
㊽
(74)
㊺
㊸
㊿
(75)
(51)

packing

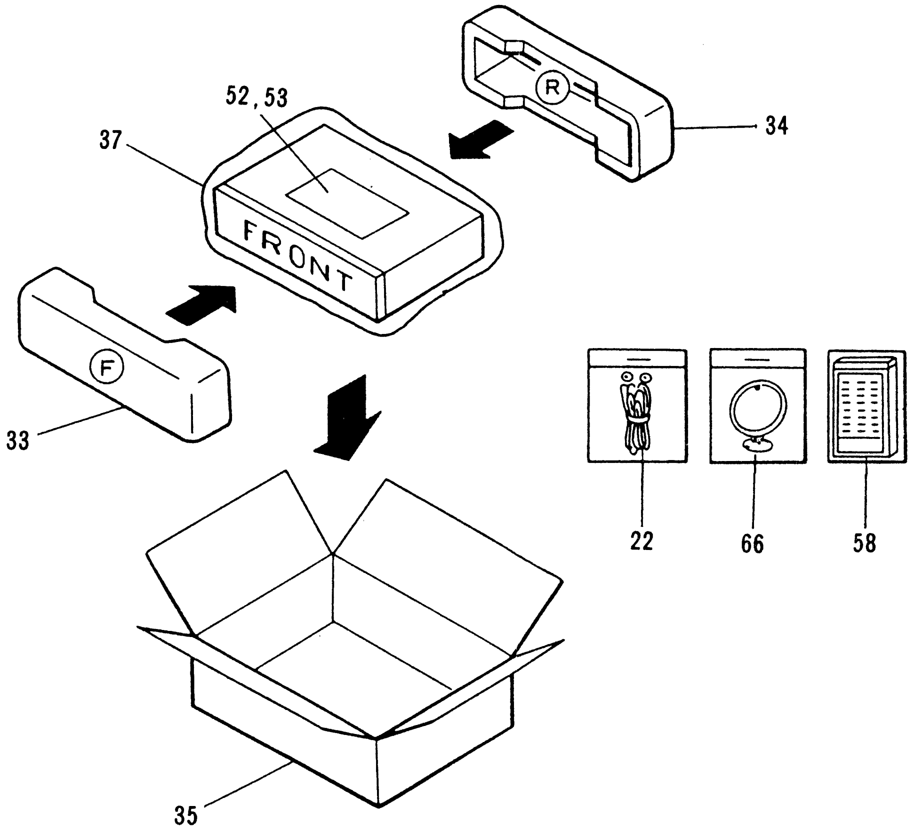
52, 53
FRONT
R
F

3. SCHEMATIC DIAGRAM

IC431	LA1265S	Q472	2SC1740SLN	D431-D435	1SS252
IC451	AN7470P	Q451	2SC2603	D901-D904	1SV147
IC471	LM7001	Q421,Q902	2SC2668	L901	
		Q471	2SK246	L901	ATC1001
Q473,Q474	RN2201	Q901,Q903,Q904	2SK241	L902	ATC1010
Q454	2SA933S	Q905	2SC2786	L903	ATC-247
Q452,Q453,Q441	2SC1740S			L906	LAU2R2M

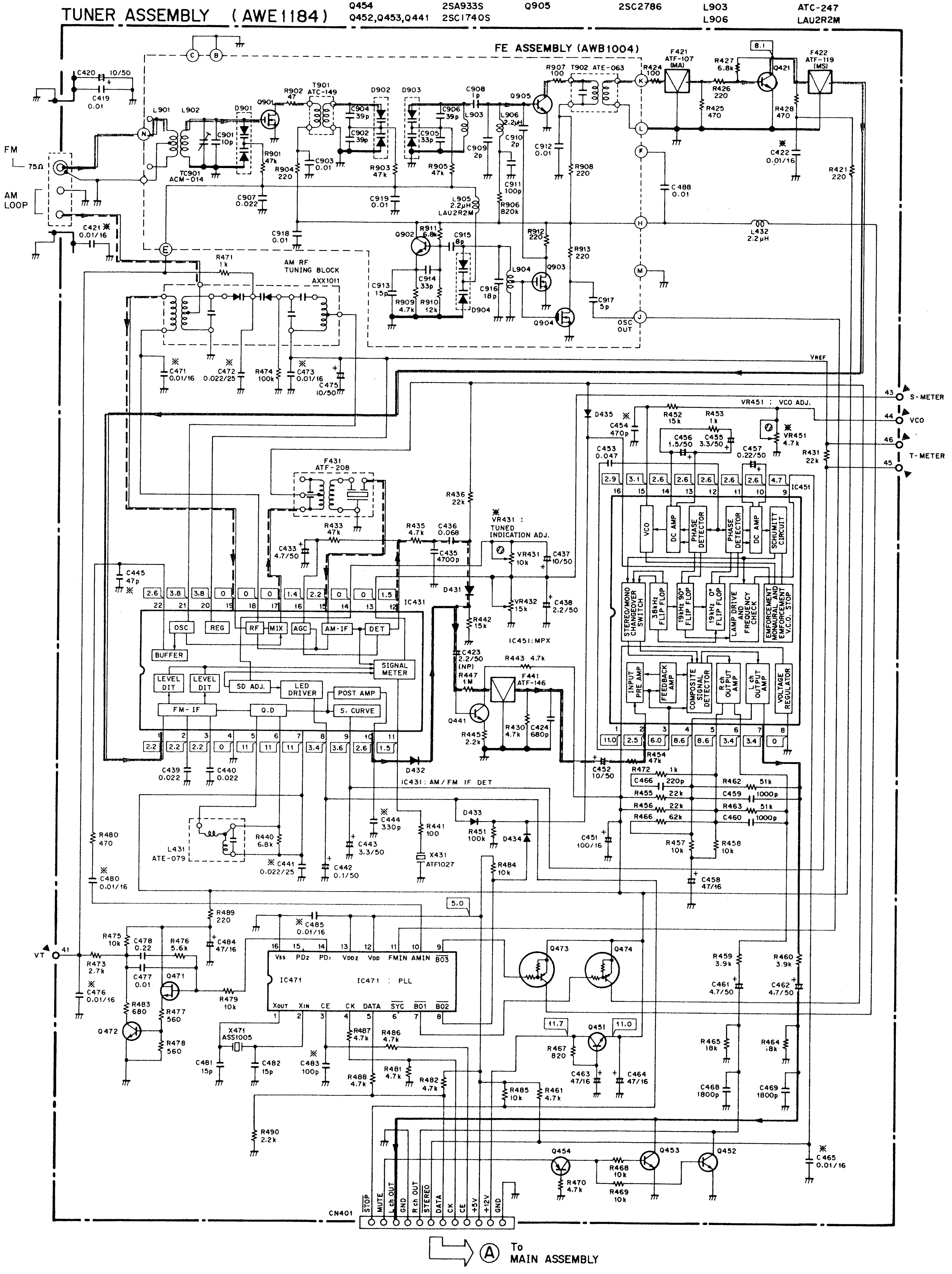

TUNER ASSEMBLY (AWE1184)
FE ASSEMBLY (AWB1004)
FM 75Ω
AM LOOP
AM RF TUNING BLOCK AXX1011
F421 ATF-107 (MA)
F422 ATF-119 (MS)
F431 ATF-208
F441 ATF-146
IC431
IC431 : AM/FM IF DET
IC451
IC451 : MPX
IC471 : PLL
VR451 : VCO ADJ.
VR431 : TUNED INDICATION ADJ.
S-METER
VCO
T-METER
VT
CN401
STOP
MUTE
GND
L ch OUT
R ch OUT
STEREO
DATA
CK
CE
+5V
+12V
GND
To MAIN ASSEMBLY

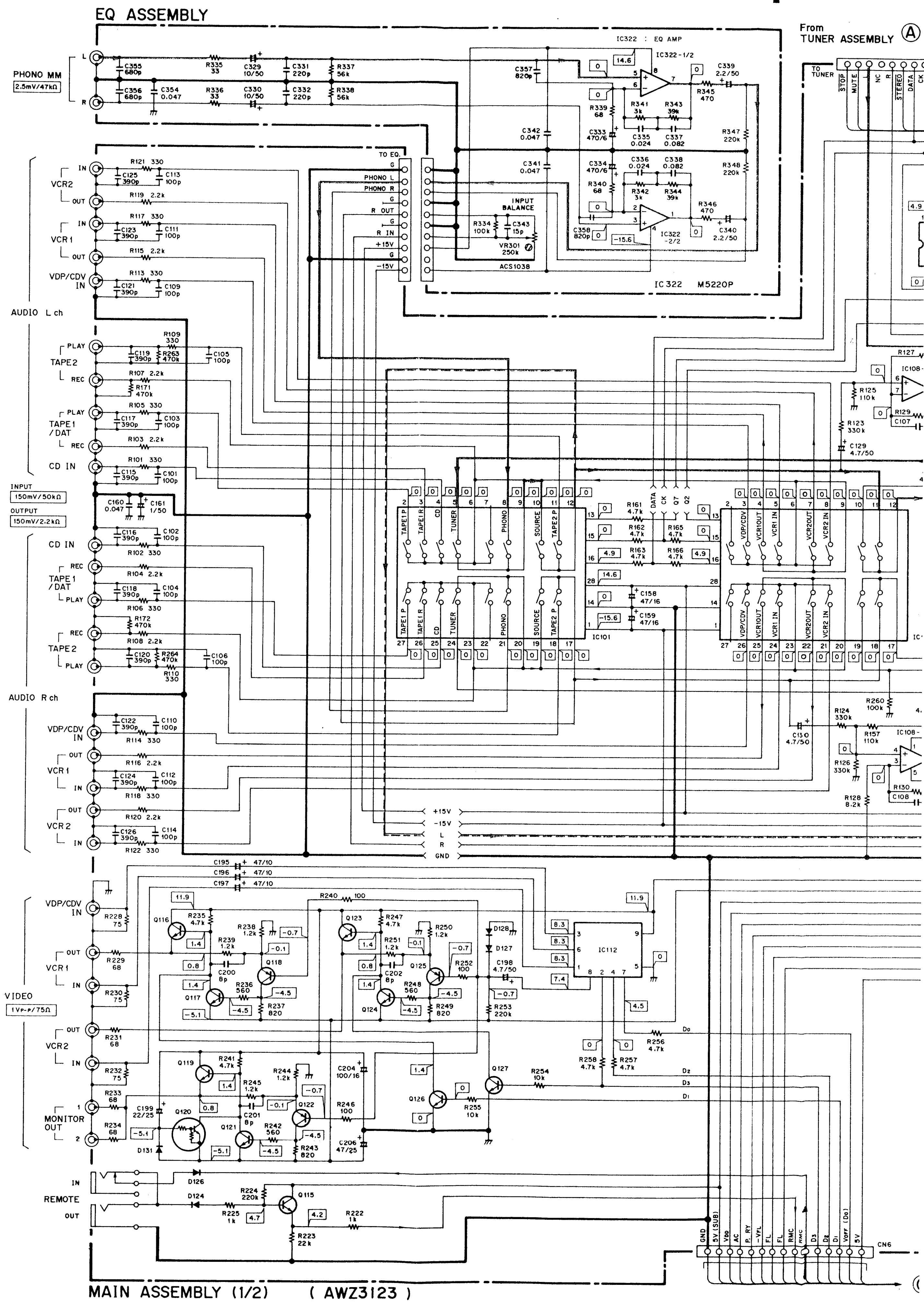

EQ ASSEMBLY
IC322 : EQ AMP
IC322 M5220P
PHONO MM
2.5mV/47kΩ
INPUT BALANCE
VR301 250k
ACS1038
From TUNER ASSEMBLY
TO TUNER
TO EQ
PHONO L
PHONO R
R OUT
R IN
+15V
-15V
VCR2
VCR1
VDP/CDV IN
AUDIO L ch
AUDIO R ch
TAPE2
TAPE1 /DAT
PLAY
REC
CD IN
INPUT 150mV/50kΩ
OUTPUT 150mV/2.2kΩ
IC101
IC108
IC112
VIDEO
1Vp-p/75Ω
MONITOR OUT
REMOTE
IN
OUT
CN6
MAIN ASSEMBLY (1/2) (AWZ3123)

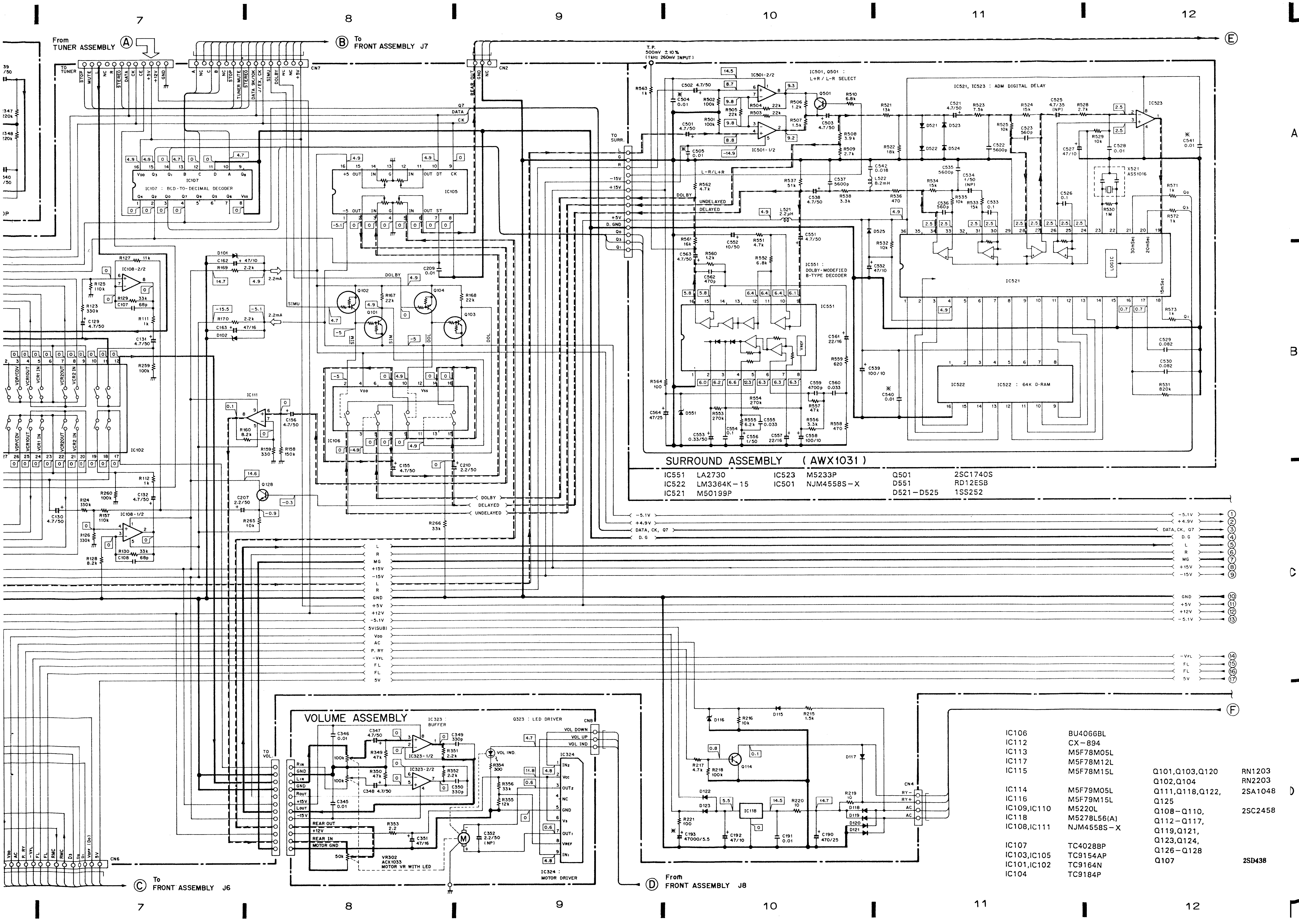
7
8
9
10
11
12
A
B
C
D
From TUNER ASSEMBLY Ⓐ
TO TUNER
STOP
MUTE
NC
R
STEREO
DATA
CK
CE
+5V
+12V
GND
Ⓑ To FRONT ASSEMBLY J7
TUNER MUTE
STEREO
DATA 9K/10K
J/EX. CL
SIMU
DOLBY
CN7
REAR OUT
GND
NC
CN2
Ⓔ
T.P. 500mV ±10% (1kHz 260mV INPUT)
IC107 : BCD-TO-DECIMAL DECODER
IC105
IC106
IC108-2/2
IC108-1/2
IC111
IC102
Q101
Q102
Q103
Q104
Q128
DOLBY
DELAYED
UNDELAYED
TO SURR.
L
G
R
-15V
+15V
DOLBY
UNDELAYED
DELAYED
+5V
D. GND
Q0
Q3
Q1
IC501-2/2
IC501-1/2
IC501, Q501 : L+R / L-R SELECT
L-R/L+R
IC521, IC523 : ADM DIGITAL DELAY
IC523
IC521
LOGIC
30mSec
20mSec
15mSec
X521 ASS1016
IC551 : DOLBY-MODIFIED B-TYPE DECODER
IC551
IC522
IC522 : 64K D-RAM
-5.1V
+4.9V
DATA, CK, Q7
D. G
L
R
MG
+15V
-15V
GND
+5V
+12V
-5.1V
5V(SUB)
VDD
AC
P. RY
-VFL
FL
FL
5V
① ② ③ ④ ⑤ ⑥ ⑦ ⑧ ⑨ ⑩ ⑪ ⑫ ⑬ ⑭ ⑮ ⑯ ⑰
Ⓕ
VOLUME ASSEMBLY
IC323 : BUFFER
IC323-1/2
IC323-2/2
Q323 : LED DRIVER
VOL IND.
CN8
VOL DOWN
VOL UP
VOL IND
IC324
IC324 : MOTOR DRIVER
TO VOL.
RIN
GND
LIN
GND
ROUT
+15V
LOUT
-15V
REAR OUT
+12V
REAR IN
MOTOR GND
VR302 ACX1033 MOTOR VR WITH LED
Ⓓ From FRONT ASSEMBLY J8
Ⓒ To FRONT ASSEMBLY J6
CN6
CN4
RY-
RY+
AC
AC
IC118
Q114
D116
D115
D117
D118
D119
D120
D121
D122
D123

SURROUND ASSEMBLY (AWX1031)

IC551	LA2730	IC523	M5233P	Q501	2SC1740S
IC522	LM3364K-15	IC501	NJM4558S-X	D551	RD12ESB
IC521	M50199P			D521-D525	1SS252

IC106	BU4066BL
IC112	CX-894
IC113	M5F78M05L
IC117	M5F78M12L
IC115	M5F78M15L
IC114	M5F79M05L
IC116	M5F79M15L
IC109,IC110	M5220L
IC118	M5278L56(A)
IC108,IC111	NJM4558S-X
IC107	TC4028BP
IC103,IC105	TC9154AP
IC101,IC102	TC9164N
IC104	TC9184P

Q101,Q103,Q120	RN1203
Q102,Q104	RN2203
Q111,Q118,Q122, Q125	2SA1048
Q108-Q110, Q112-Q117, Q119,Q121, Q123,Q124, Q126-Q128	2SC2458
Q107	2SD438

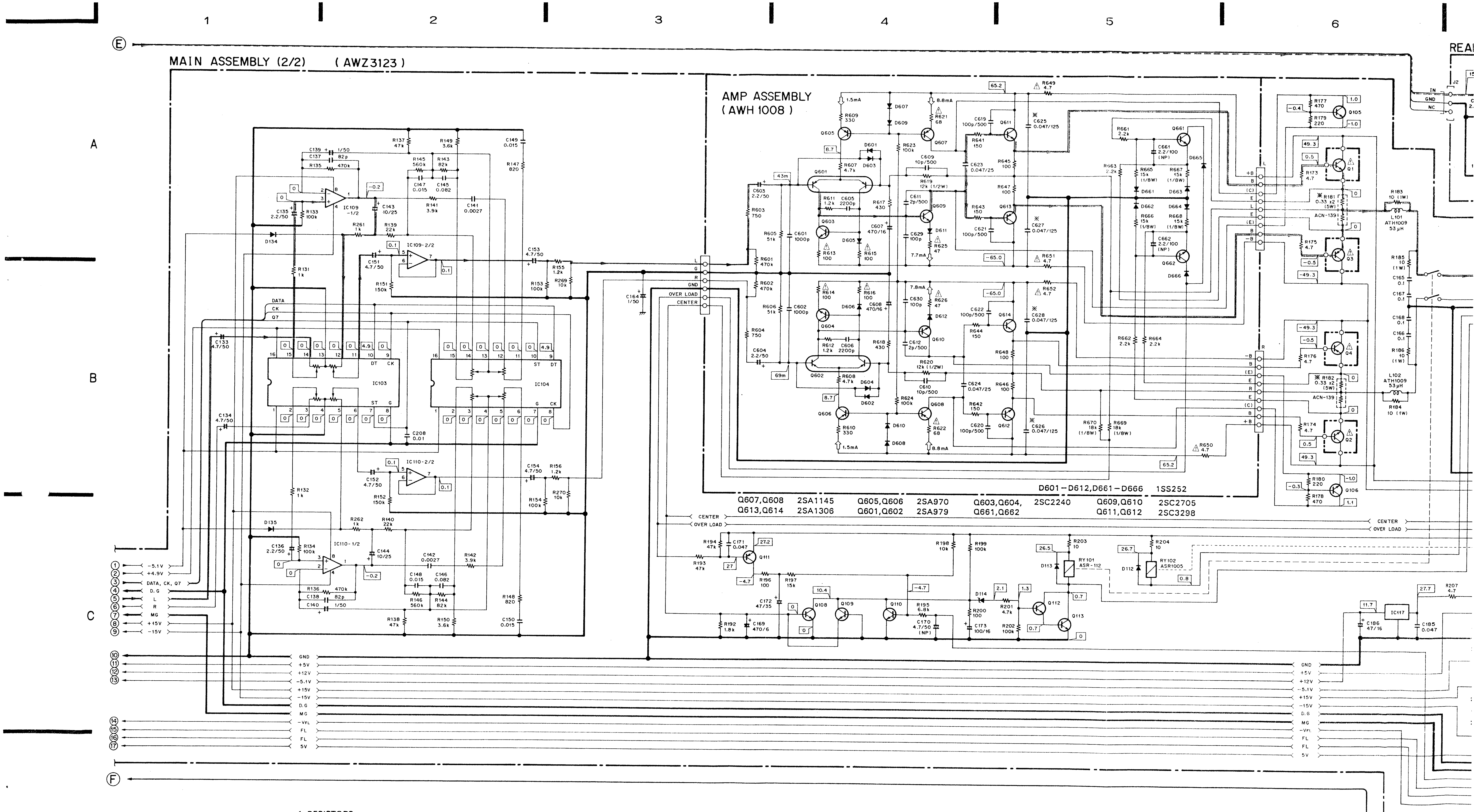
MAIN ASSEMBLY (2/2) (AWZ3123)
AMP ASSEMBLY (AWH 1008)
REAR
IC103
IC104
IC109-1/2
IC109-2/2
IC110-1/2
IC110-2/2
IC117
RY101 ASR-112
RY102 ASR1005
L101 ATH1009 53μH
L102 ATH1009 53μH
ACN-139
D601−D612,D661−D666 1SS252
Q607,Q608 2SA1145
Q613,Q614 2SA1306
Q605,Q606 2SA970
Q601,Q602 2SA979
Q603,Q604, Q661,Q662 2SC2240
Q609,Q610 2SC2705
Q611,Q612 2SC3298
① −5.1V
② +4.9V
③ DATA, CK, Q7
④ D.G
⑤ L
⑥ R
⑦ MG
⑧ +15V
⑨ −15V
⑩ GND
⑪ +5V
⑫ +12V
⑬ −5.1V
+15V
−15V
D.G
MG
⑭ −VFL
⑮ FL
⑯ FL
⑰ 5V
CENTER
OVER LOAD
Ⓔ
Ⓕ
A
B
C
1
2
3
4
5
6

Q105,Q106	2SC2603
D109	D5SB20F
D114	HZS9AL
D101,D102,D116,D133	RD5.1ESB2
D118−D121	1SR139−400
D110−D113,D115, D117,D122, D124- D132, D134, D135	1SS252
D123	1S1555
D107,D108	1S2471
D103−D106	10E2FD

1. RESISTORS:
Indicated in Ω, ¼W, ⅛W, ±5% tolerance unless otherwise noted k : kΩ, M : MΩ, (F) : ±1%, (G) : ±2%, (K) : ±10% (M); ±20% tolerance

2. CAPACITORS:
Indicated in capacity (μF)/voltage (V) unless otherwise noted p : pF
Indication without voltage is 50V except electrolytic capacitor.

3. VOLTAGE, CURRENT:
▭ :Signal voltage at 100W + 100W(FRONT), 15W + 15W(REAR) 8ohm output(1kHz)
▭ : DC voltage (V) at no input signal
Value in ( ) is DC voltage at rated power.
⇦ mA : DC current at no input signal

4. OTHERS:
➡ : Signal route.
⊘ : Adjusting point.
The ⚠ mark found on some component parts indicates the importance of the safety factor of the part. Therefore, when replacing, be sure to use parts of identical designation.
※ marked capacitors and resistors have parts numbers.

This is the basic schematic diagram, but the actual circuit may vary due to improvements in design.

5.SWITCHES
S102 PUSH SW SP A - SP B - REAR
S304,S339 TACT SW
S301-S303,S305-S338,S340-S351
TACT SW

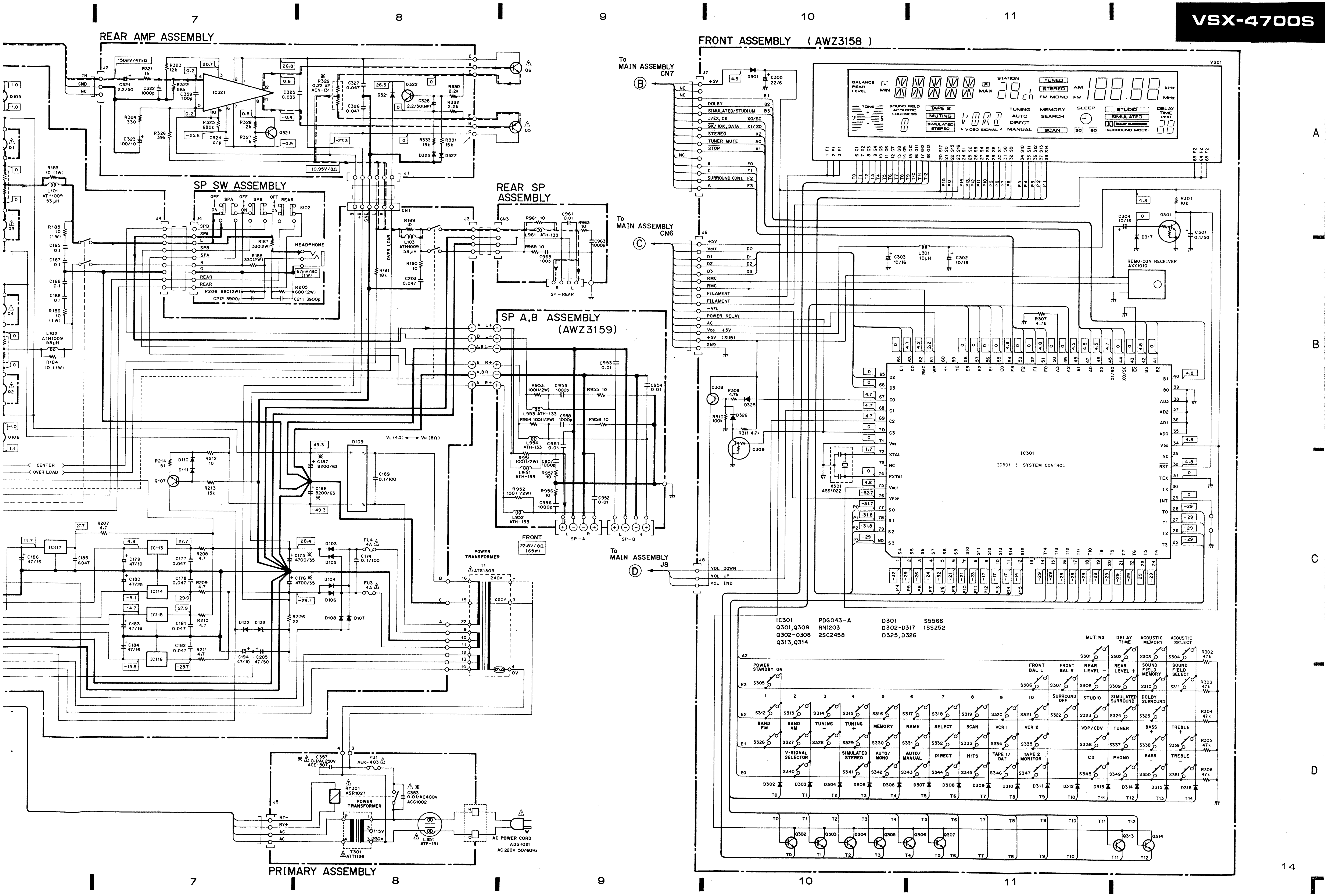
7
8
9
10
11
A
B
C
D
REAR AMP ASSEMBLY
IC321
Q321
Q322
Q5
Q6
10.95V/8Ω
150mV/47kΩ
SP SW ASSEMBLY
SPA
SPB
REAR
HEADPHONE
S102
67mV/8Ω (1W)
REAR SP ASSEMBLY
SP - REAR
SP A,B ASSEMBLY (AWZ3159)
SP - A
SP - B
FRONT
22.8V/8Ω (65W)
VL (4Ω) ⟷ VH (8Ω)
D109
C187 8200/63
C188 8200/63
POWER TRANSFORMER
T1 ATS1303
240V
220V
0V
FU3 4A
FU4 4A
IC113
IC114
IC115
IC116
IC117
Q107
CENTER
OVER LOAD
PRIMARY ASSEMBLY
C357 0.1/AC250V ACE-507
FU1 AEK-403
RY301 ASR1027
C353 0.01/AC400V ACG1002
POWER TRANSFORMER
T301 ATT1136
115V
230V
L351 ATF-151
AC POWER CORD ADG1021
AC 220V 50/60Hz
RY-
RY+
AC
To MAIN ASSEMBLY CN7
To MAIN ASSEMBLY CN6
To MAIN ASSEMBLY J8
B
C
D
FRONT ASSEMBLY (AWZ3158)
V301
DOLBY
SIMULATED/STUDIUM
J/EX, CK
9K/10K, DATA
STEREO
TUNER MUTE
STOP
SURROUND CONT.
+5V
VOFF
FILAMENT
-VFL
POWER RELAY
VDD +5V
+5V (SUB)
GND
VOL DOWN
VOL UP
VOL IND
BALANCE
REAR LEVEL
MIN
MAX
STATION
TUNED
STEREO
FM MONO
AM
FM
kHz
MHz
TONE
SOUND FIELD ACOUSTIC LOUDNESS
TAPE 2
MUTING
SIMULATED STEREO
TUNING
AUTO
DIRECT
MANUAL
MEMORY
SEARCH
SCAN
SLEEP
STUDIO
SIMULATED
DOLBY SURROUND
SURROUND MODE
DELAY TIME (mS)
VIDEO SIGNAL
REMO-CON RECEIVER AXX1010
Q301
Q308
Q309
IC301
IC301 : SYSTEM CONTROL
X301 ASS1022
IC301 PDG043-A
Q301,Q309 RN1203
Q302-Q308 2SC2458
Q313,Q314
D301 S5566
D302-D317 1SS252
D325,D326
MUTING
DELAY TIME
ACOUSTIC MEMORY
ACOUSTIC SELECT
POWER STANDBY ON
FRONT BAL L
FRONT BAL R
REAR LEVEL -
REAR LEVEL +
SOUND FIELD MEMORY
SOUND FIELD SELECT
SURROUND OFF
STUDIO
SIMULATED SURROUND
DOLBY SURROUND
BAND FM
BAND AM
TUNING -
TUNING +
MEMORY
NAME
SELECT
SCAN
VCR 1
VCR 2
VDP/CDV
TUNER
BASS +
TREBLE +
V-SIGNAL SELECTOR
SIMULATED STEREO
AUTO/MONO
AUTO/MANUAL
DIRECT
HITS
TAPE 1/DAT
TAPE 2 MONITOR
CD
PHONO
BASS -
TREBLE -
Q302
Q303
Q304
Q305
Q306
Q307
Q313
Q314

4. P.C.BOARDS CONNECTION DIAGRAM

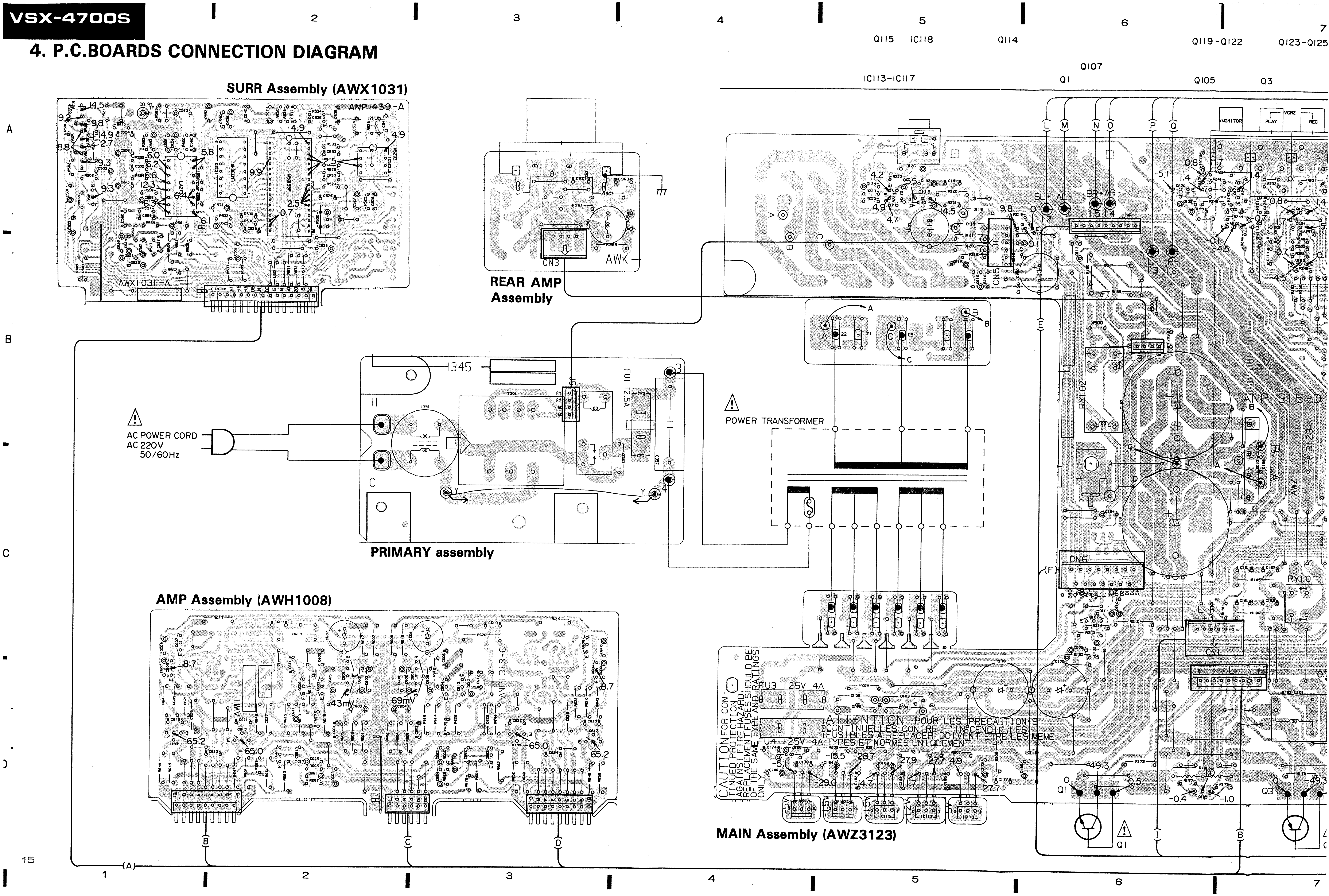
SURR Assembly (AWX1031)
ANP1439-A
AWX1031-A
REAR AMP Assembly
AWK
CN3
PRIMARY assembly
1345
FU1 1.25A
T301
L351
J5
H
C
Y
AC POWER CORD
AC 220V
50/60Hz
POWER TRANSFORMER
AMP Assembly (AWH1008)
ANP1319-C
AWH
43mV
69mV
8.7
65.2
-65.0
MAIN Assembly (AWZ3123)
ANP1315-D
AWZ 3123
CN1
CN5
CN6
J3
J4
RY101
RY102
FU3 125V 4A
FU4 125V 4A
CAUTION FOR CONTINUED PROTECTION AGAINST FIRE HAZARD, REPLACEMENT FUSES SHOULD BE OF THE SAME TYPE AND RATINGS ONLY.
ATTENTION - POUR LES PRECAUTIONS CONTINUELLES CONTRE L'INCENDIE, LES FUSIBLES A REPLACER DOIVENT ETRE LES MEME TYPES ET NORMES UNIQUEMENT.
Q115
IC118
Q114
IC113-IC117
Q107
Q1
Q119-Q122
Q105
Q123-Q125
Q3
VMONITOR
PLAY
VCR2
REC
BL+
AL+
BR+
AR+
L
M
N
O
P
Q
E
(F)
A
B
C
D
1
2
3
4
5
6
7

7 8 9 10 11 12

Q119-Q122 Q123-Q125 Q116-Q118 IC101
IC112 Q127 Q126 IC106 IC102 IC108
IC105 IC111 Q128 IC109 IC104 IC110 IC107
Q105 Q3 Q108-Q113 Q4 Q101-Q104 Q106 Q2 IC103

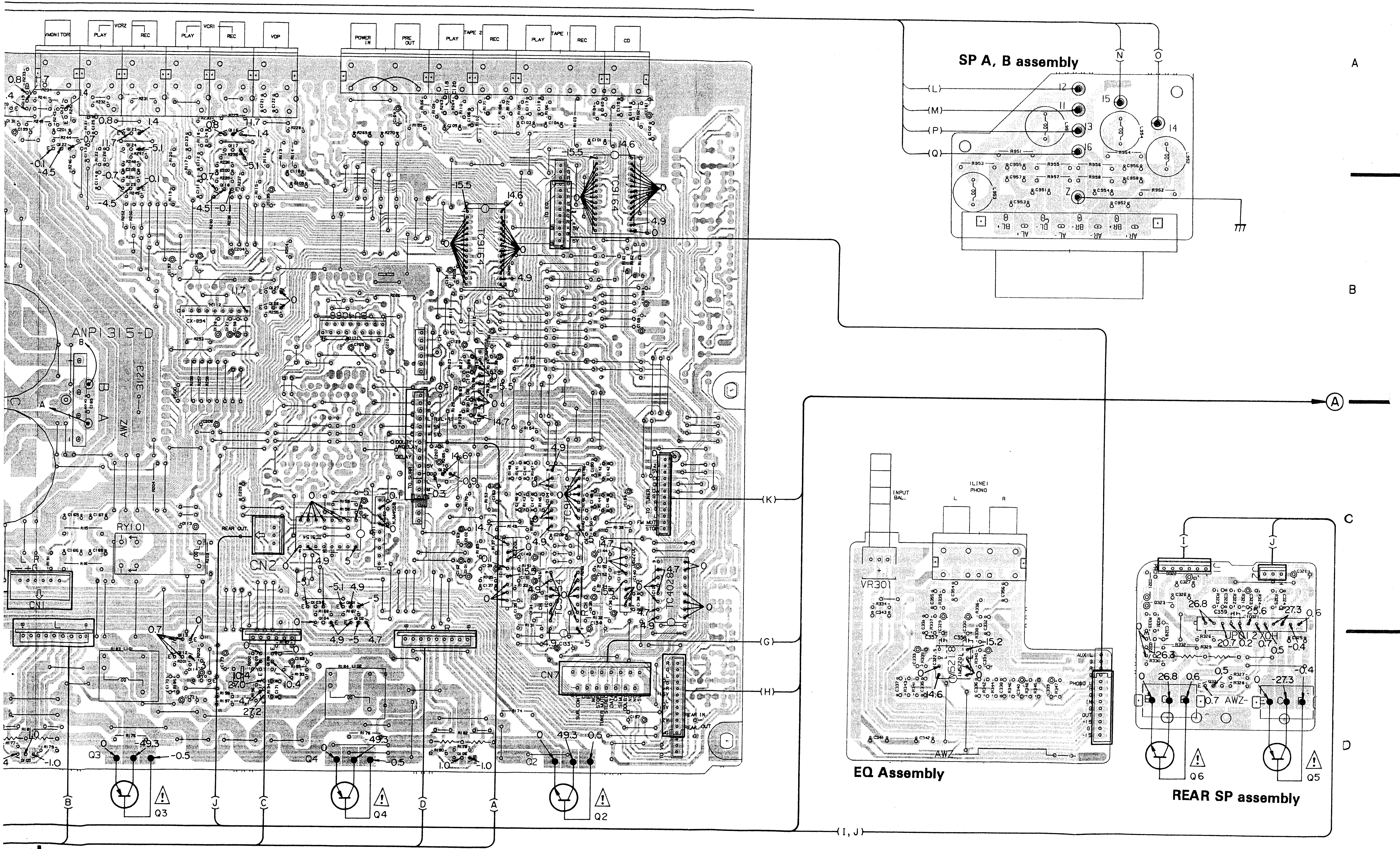

A
B
C
D
V.MONITOR
VCR2
PLAY
REC
VCR1
VDP
POWER IN
PRE OUT
TAPE 2
TAPE 1
CD
SP A, B assembly
EQ Assembly
REAR SP assembly
ANP1315-D
AWZ
RY101
CN1
CN2
CN7
IC9164
IC402
IC112
CX-894
REAR OUT
TO TUNER
TO SURR
DOLBY
DELAY
REAR IN
REAR OUT
VR301
INPUT BAL.
(LINE) PHONO
L
R
AUX
PHONO
Q2
Q3
Q4
Q5
Q6
N
O
L
M
P
Q
K
G
H
I, J
I
J

7 8 9 10 11 12

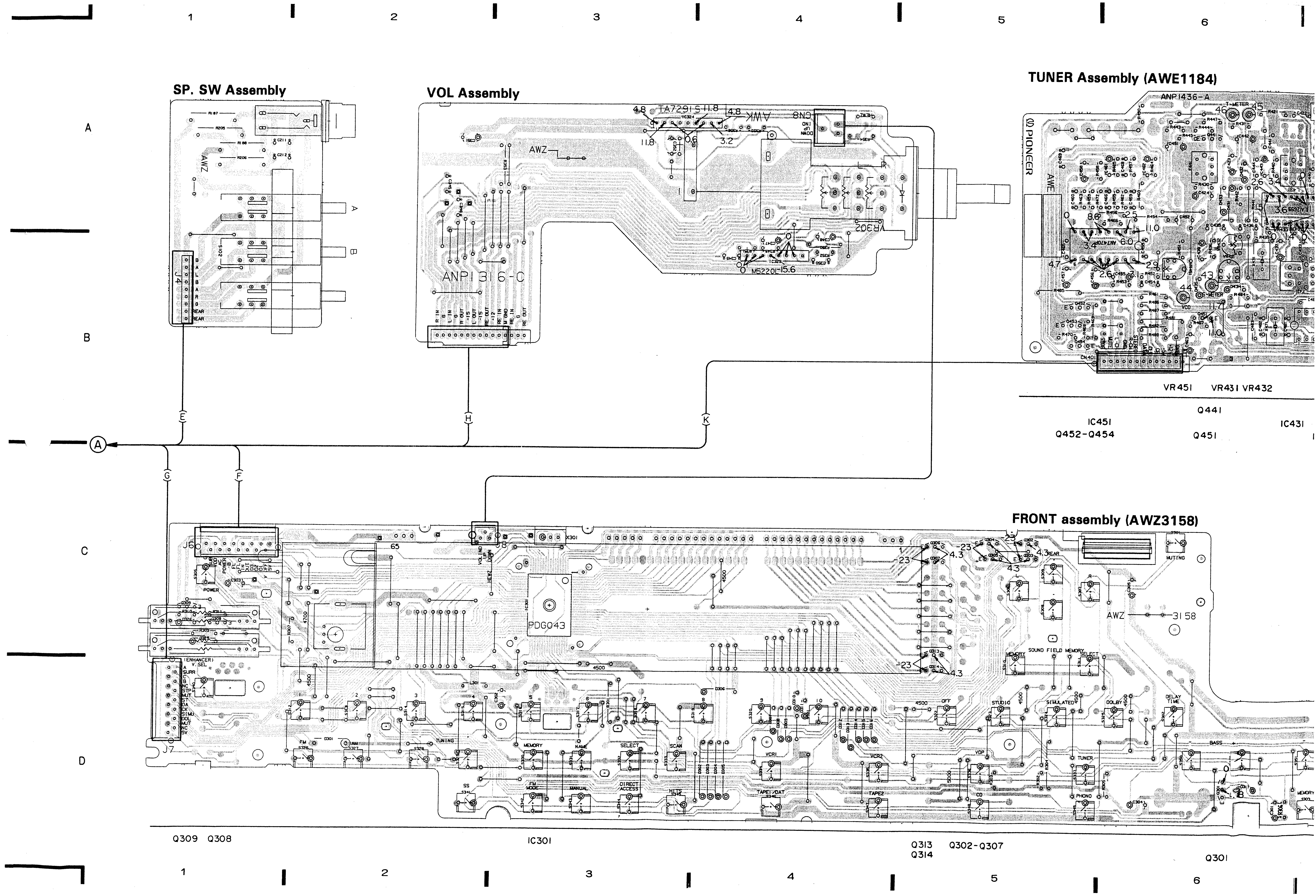
SP. SW Assembly
VOL Assembly
TUNER Assembly (AWE1184)
FRONT assembly (AWZ3158)
1
2
3
4
5
6
A
B
C
D
AWZ
J4
S102
ANP1316-C
TA7291S
IC324
CN8
UP
DOWN
VR302
M52201
ANP1436-A
PIONEER
AWE
T-METER
S-METER
VCO
AN7470
CN401
VR451
VR431
VR432
IC451
Q452-Q454
Q441
Q451
IC431
E
H
K
A
G
F
J6
J7
X301
PDG043
IC301
POWER
MUTING
AWZ 3158
SOUND FIELD MEMORY
SELECT
MEMORY
FM
AM
TUNING
NAME
SCAN
SS
FM MODE
MANUAL
DIRECT ACCESS
HI-TS
VCR1
VCR2
TAPE1/DAT
TAPE2
OFF
STUDIO
SIMULATED
DOLBY
DELAY TIME
VDP
CD
TUNER
PHONO
BASS
(ENHANCER)
V. SEL
Q309
Q308
Q313
Q314
Q302-Q307
Q301

TUNER Assembly (AWE1184)

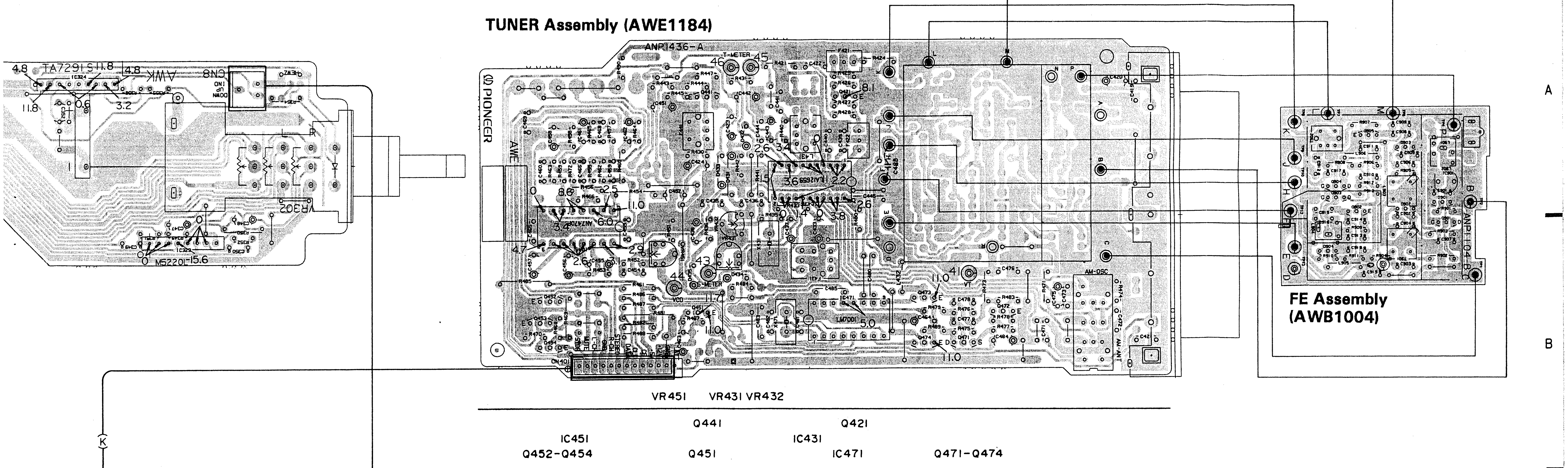
ANP1436-A
AWE
PIONEER
TA7291S
M5220L
VR302
CN8
AWK
T-METER
VR451 VR431 VR432
Q441 Q421
IC451 IC431
Q452-Q454 Q451 IC471 Q471-Q474
LM7001
AM-OSC
ANP1104-B
K

FE Assembly (AWB1004)

FRONT assembly (AWZ3158)

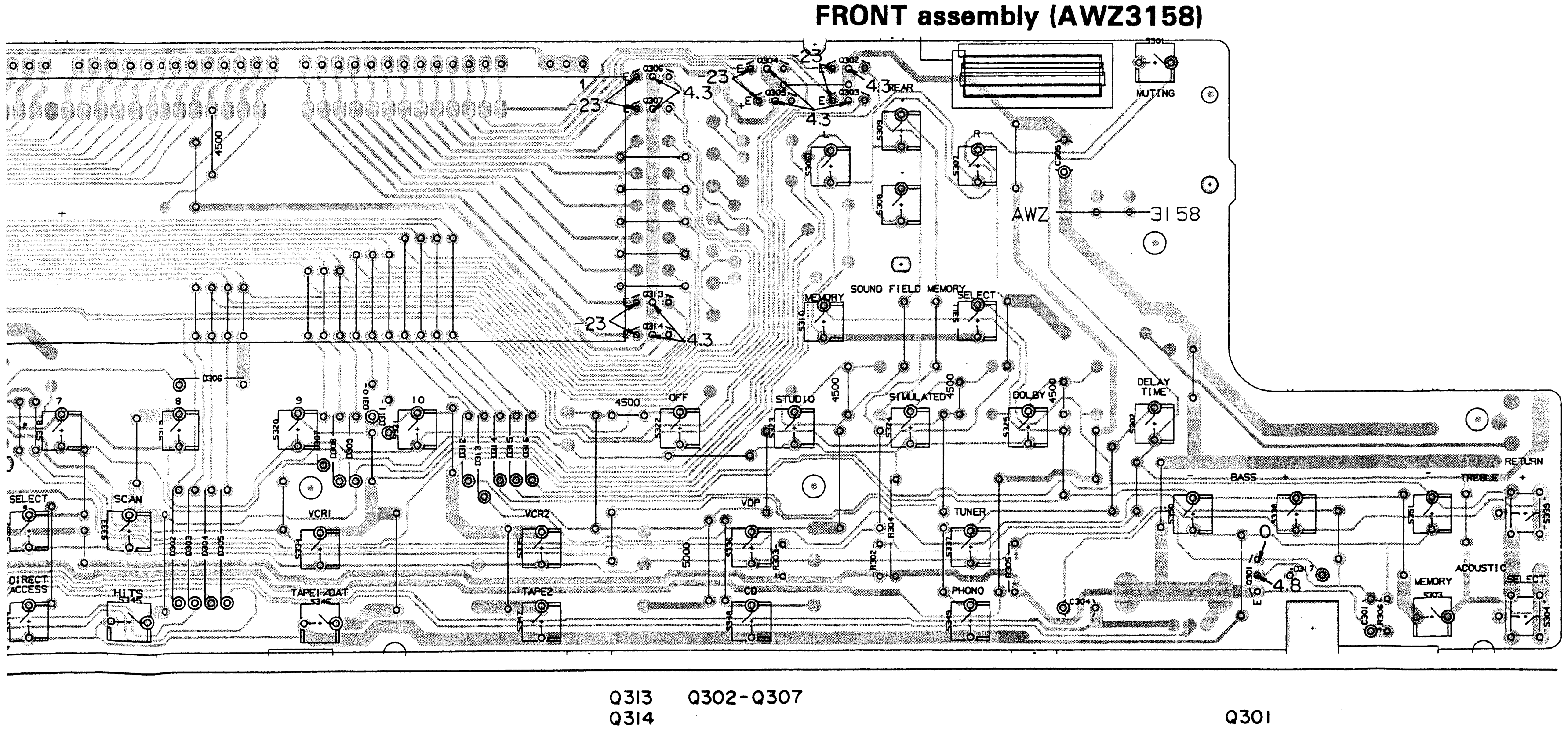
MUTING
AWZ 3158
SOUND FIELD MEMORY
MEMORY
SELECT
STUDIO
SIMULATED
DOLBY
DELAY TIME
OFF
SELECT
SCAN
VCR1
VCR2
VDP
TUNER
BASS
TREBLE
RETURN
DIRECT ACCESS
HITS
TAPE1/DAT
TAPE2
CD
PHONO
ACOUSTIC
MEMORY
Q313 Q302-Q307
Q314
Q301

NOTE

1. This P.C.B connection diagram is viewed from the parts mounted side.
2. The parts which have been mounted on the board can be replaced with those shown with the corresponding wiring symbols listed in the following Table.

P.C.B. pattern diagram indication	Corresponding part symbol	Part Name
Q504 E	E or E	Transistor
Q215	or	Radiator type transistor
D203	D203	Diode
R237	R237	Resistor
C513	+	Capacitor (Polarity)
C518		Capacitor (Non-polarity)

Others

P.C.B. pattern diagram indication	Part Name
IC	IC
S	Switch
RY	Relay
L	Coil
F	Filter
VR	Variable resistor or Semi-fixed resistor

3. The capactor terminal marked with ◎(double circles) shows negatine termian.
4. The diode terminal marked with ◎(double circles) shows cathode side.
5. The transistor terminal to which E is affixed shows the emitter.

This P.C.B. connection diagram is viewed from the foil side.

TUNER Assembly (AWE1184)

FE Assembly (AWB1004)

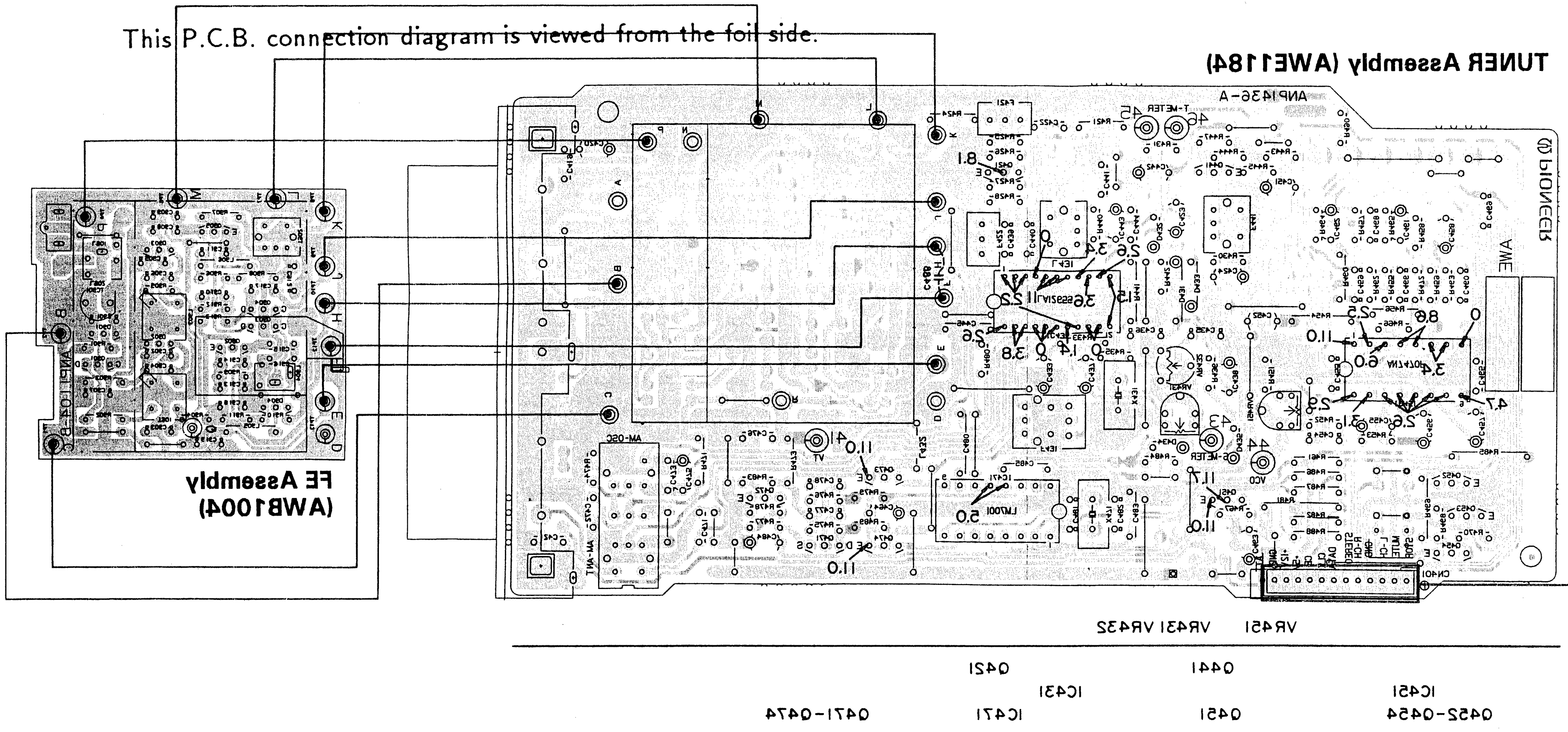
PIONEER
ANP1436-A
AWE
T-METER
S-METER
VCO
VT
AM-OSC
ANT-AM
LA1260
LM7001
CN401
VR451
VR431 VR432
Q421
Q441
IC431
IC451
Q471-Q474
IC471
Q451
Q452-Q454
AWB1004
K
L
M
N
P
A
B
C
E
H
D

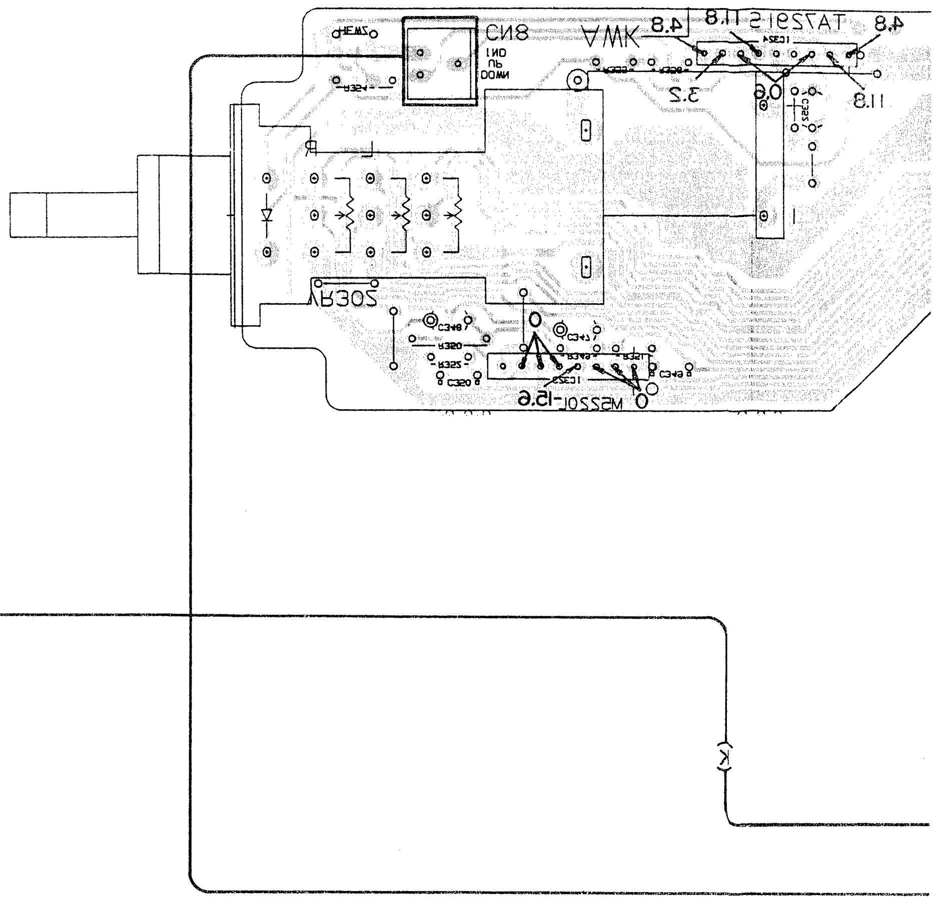
CN8
AWM
TA7291S
YB02Q
M52201
4.8
11.8
3.2
11.8
-15.6

FRONT assembly (AWZ3158)

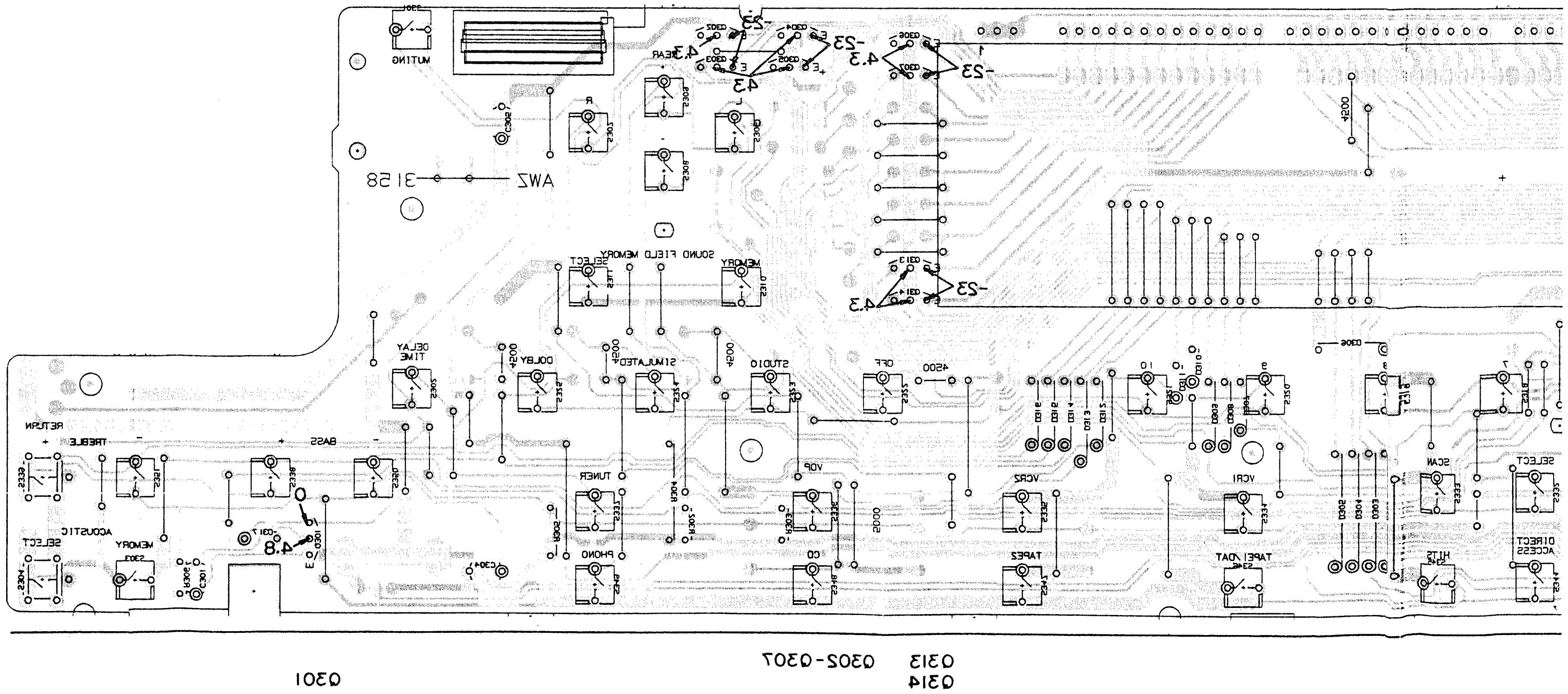
AWZ 3158
MUTING
SOUND FIELD MEMORY
MEMORY
SELECT
DELAY TIME
DOLBY
SIMULATED
STUDIO
OFF
RETURN
TREBLE
BASS
ACOUSTIC SELECT
MEMORY
TUNER
PHONO
VDP
CD
VCR2
TAPE2
VCR1
TAPE1/DAT
SCAN
HITS SCAN
SELECT
DIRECT ACCESS
Q301
Q302-Q307
Q313
Q314
-23
4.3
4.8

NOTE

1. This P.C.B connection diagram is viewed from the parts mounted side.
2. The parts which have been mounted on the board can be replaced with those shown with the corresponding wiring symbols listed in the following Table.

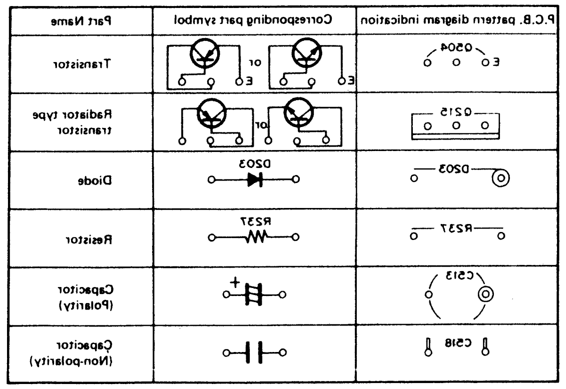

P.C.B. pattern diagram indication	Corresponding part symbol	Part Name
Q504 E	E or E	Transistor
Q215	or	Radiator type transistor
D203	D203	Diode
R237	R237	Resistor
C513	+	Capacitor (Polarity)
C518		Capacitor (Non-polarity)

Others

P.C.B. pattern diagram indication	Part Name
IC	IC
S	Switch
RY	Relay
L	Coil
F	Filter
VR	Variable resistor or Semi-fixed resistor

3. The capacitor terminal marked with ◎ (double circles) shows negative terminal.
4. The diode terminal marked with ◎ (double circles) shows cathode side.
5. The transistor terminal to which E is affixed shows the emitter.

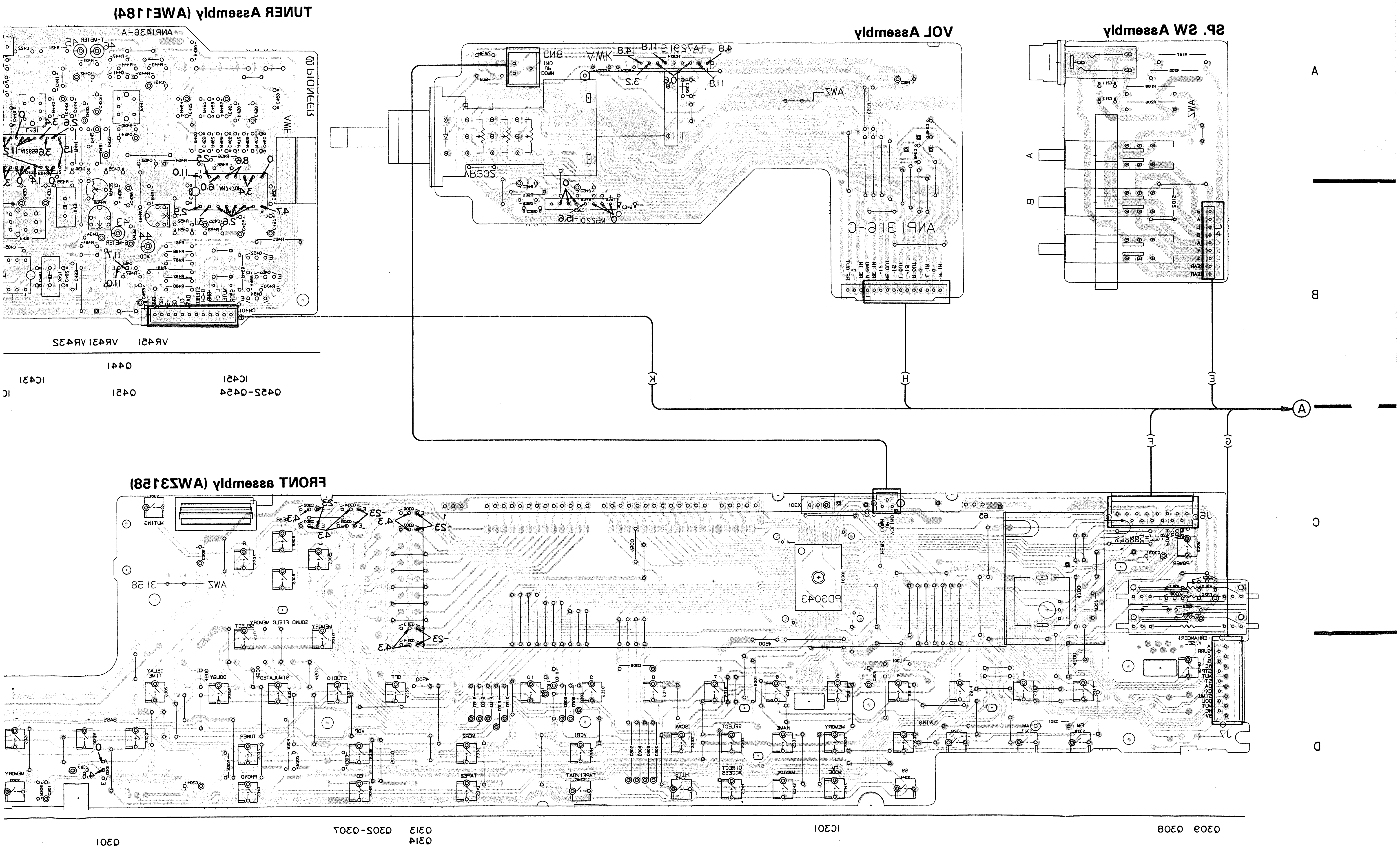
TUNER Assembly (AWE1184)
VOL Assembly
SP. SW Assembly
FRONT assembly (AWZ3158)
PIONEER
ANP1436-A
ANP1316-C
AWE
AWZ
AWZ 3158
PDG043
VR451 VR431 VR432
Q441
IC451
IC431
Q451
Q452-Q454
IC301
Q313
Q314
Q302-Q307
Q301
Q309 Q308
A
B
C
D
E
F
G
H
K
1
2
3
4
5
6

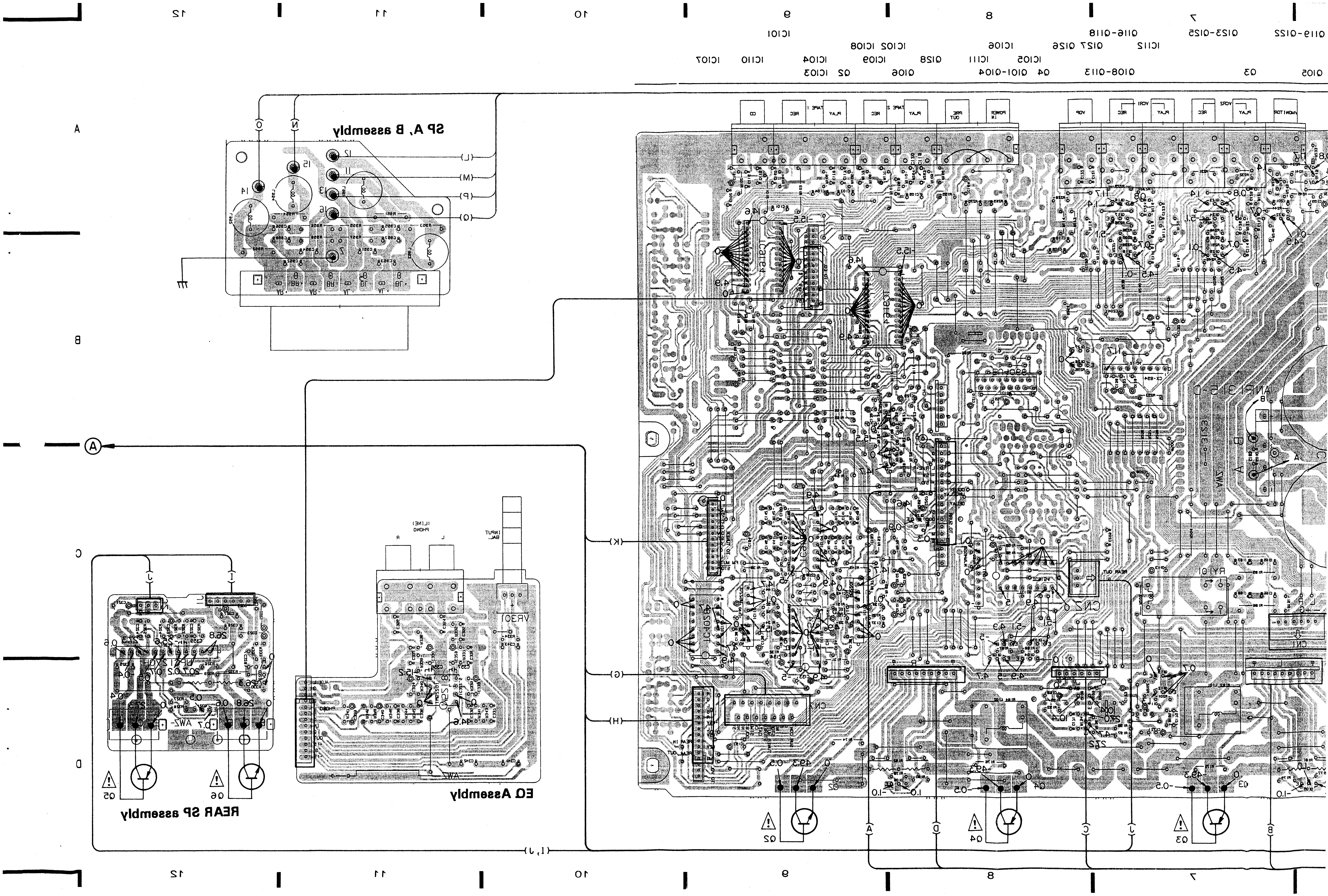
12
11
10
9
8
7
IC101
IC102 IC108
IC106
Q116-Q118
Q123-Q125
Q119-Q122
IC107
IC110
IC104
IC109
Q128
IC111
IC105
IC112
Q127 Q126
IC103
Q2
Q106
Q101-Q104
Q4
Q108-Q113
Q3
Q105
A
B
C
D
SP A, B assembly
EQ Assembly
REAR SP assembly
CD
REC
PLAY
TAPE 1
TAPE 2
PRE OUT
POWER IN
VDP
VCR1
VCR2
MONITOR
PHONO
(LINE)
INPUT BAL.
VR301
CN1
CN2
RY101
REAR OUT
Q2
Q3
Q4
Q5
Q6
(K)
(G)
(H)
(I, J)
(L)
(M)
(P)
(Q)
O
N
I
J
A
D
C
B

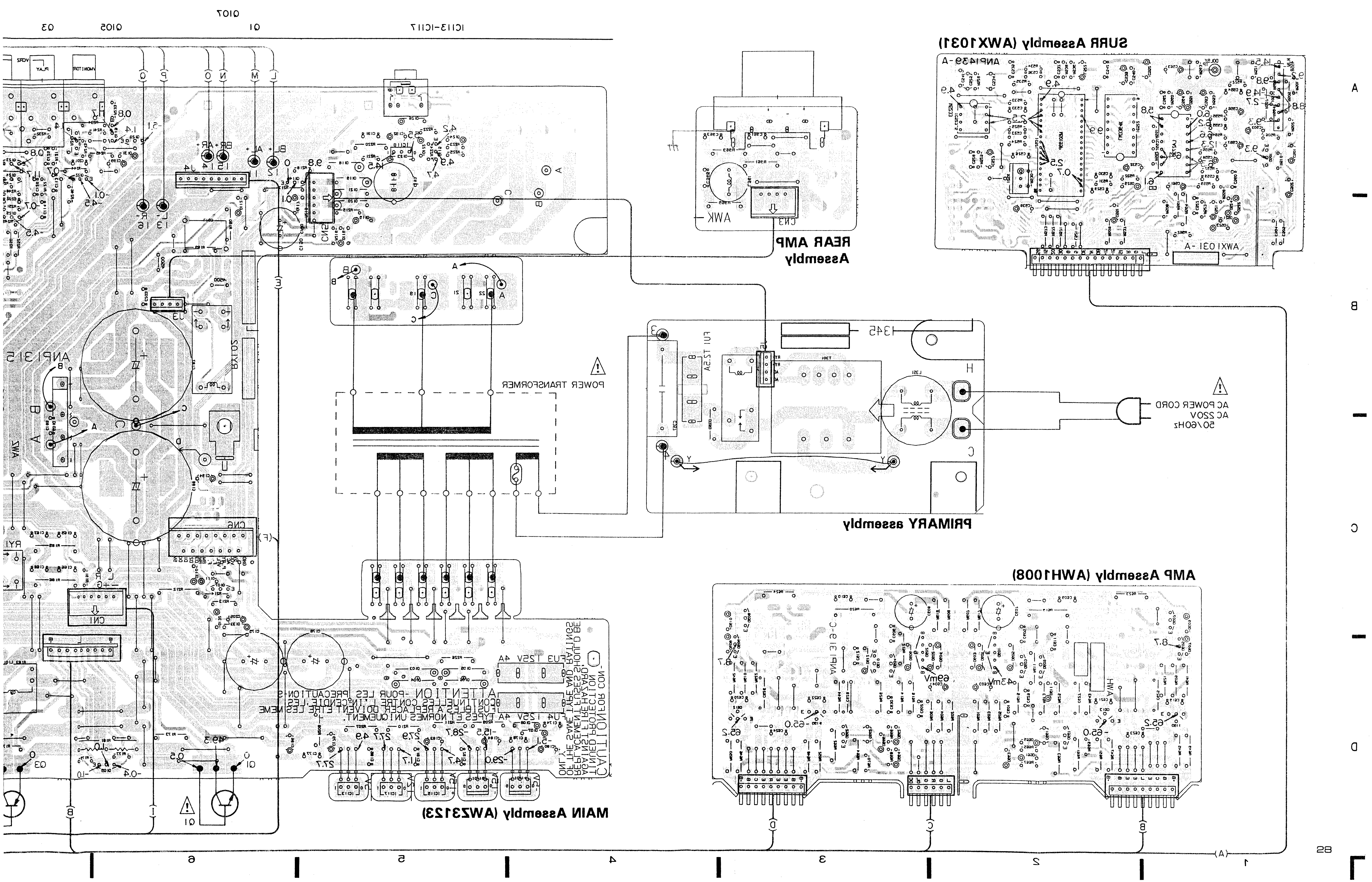
Q123-
Q119-Q122
Q114
IC118
Q115
Q107
Q3
Q105
Q1
IC113-IC117
SURR Assembly (AWX1031)
ANP1439-A
AWX1031-A
REAR AMP Assembly
AWK
CN3
PRIMARY assembly
FU1 T2.5A
1345
T301
L351
H
C
Y
AC POWER CORD
AC 220V
50/60Hz
POWER TRANSFORMER
AMP Assembly (AWH1008)
ANP1316-C
AWH
MAIN Assembly (AWZ3123)
ANP1315
RY105
CN1
CN5
CN6
J3
J4
FU3 T25V 4A
FU4 125V 4A
CAUTION-FOR CONTINUED PROTECTION AGAINST RISK OF FIRE, REPLACE ONLY WITH SAME TYPE AND RATING OF FUSE
ATTENTION -POUR LES PRECAUTIONS CONTINUELLES CONTRE L'INCENDIE LES FUSIBLES A REPLACER DOIVENT ETRE LES MEME TYPES ET NORMES UNIQUEMENT.
A
B
C
D
E
F
L
M
N
O
P
Q
1
2
3
4
5
6

5. PCB 's PARTS LIST

NOTES:

- *Parts without part number cannot be supplied.*
- *Parts marked by "◉" are not always kept in stock. Their delivery time may be longer than usual or they may be unavailable.*
- *The ⚠ mark found on some component parts indicates the importance of the safety factor of the part. Therefore, when replacing, be sure to use parts of identical designation.*
- *For your parts Stock Control, the fast moving items are indicated with the marks ★★ and ★.*
  ★★ GENERALLY MOVES FASTER THAN ★
  This classification shall be adjusted by each distributor because it depends on model number, temperature, humidity, etc.
- *When ordering resistors, first convert resistance values into code form as shown in the following examples.*

Ex. 1 When there are 2 effective digits (any digit apart from 0), such as 560 ohm and 47k ohm (tolerance is shown by J = 5%, and K = 10%).

560Ω 56×10^1 561........................ RD1/4PS [5] [6] [1] J
47kΩ 47×10^3 473........................ RD1/4PS [4] [7] [3] J
0.5Ω 0R5... RN2H [0] [R] [5] K
1Ω 010... RS1P [0] [1] [0] K

Ex. 2 When there are 3 effective digits (such as in high precision metal film resistors).

5.62kΩ 562×10^1 5621...................... RN1/4SR [5] [6] [2] [1] F

Mark	No.	Description	Parts No.

TUNER ASSEMBLY (AWE1184)

SEMICONDUCTORS

Mark	No.	Description	Parts No.
	IC431	AM/FM IC	LA1265S
	IC451	MPX IC	AN7470P
	IC471	PLL IC	LM7001
	Q421	TRANSISTOR	2SC2668
	Q441	TRANSISTOR	2SC1740S
	Q451	TRANSISTOR	2SC2603
	Q452,453	TRANSISTOR	2SC1740S
	Q454	TRANSISTOR	2SA933S
	Q471	N-FET	2SK246
	Q472	TRANSISTOR	2SC1740SLN
	Q473,474	TRANSISTOR	RN2201
	D431−435	DIODE	1SS252

COILS

Mark	No.	Description	Parts No.
	F421	CERAMIC FILTER	ATF-107
	F422	CERAMIC FILTER	ATF-119
	F431	CERAMIC FILTER	ATF-208
	F441	FILTER	ATF-146
	L431	COIL	ATE-079
	L432	AXIAL INDUCTOR	LAU2R2M

CAPACITORS

Mark	No.	Description	Parts No.
	C419	CERAMIC CAPACITOR	CKDYF103Z50
	C420	ELECTR.CAPACITOR	CEAS100M50
	C421,422	CERAMIC CAPACITOR	ACG1021
	C423	ELECTR.CAPACITOR	CEANP2R2M50
	C424	CERAMIC CAPACITOR	CKCYB681K50
	C433	ELECTR.CAPACITOR	CEAS4R7M50
	C435	CERAMIC CAPACITOR	CKCYF472Z50
	C436	CERAMIC CAPACITOR	CKCYX683M25
	C437	ELECTR.CAPACITOR	CEAS100M50
	C438	ELECTR.CAPACITOR	CEAS2R2M50
	C439,440	CERAMIC CAPACITOR	CKCYF223Z50
	C441	CERAMIC CAPACITOR	ACG1022
	C442	ELECTR.CAPACITOR	CEAS0R1M50
	C443	ELECTR.CAPACITOR	CEAS3R3M50
	C444	CERAMIC CAPACITOR	ACG1018
	C445	CERAMIC CAPACITOR	ACG1016
	C451	ELECTR.CAPACITOR	CEAS101M16
	C452	ELECTR.CAPACITOR	CEAS100M50
	C453	CERAMIC CAPACITOR	CKCYF473Z50
	C454	CAPACITOR	ACE1039
	C455	ELECTR.CAPACITOR	CEAS3R3M50
	C456	ELECTROLYTIC CAPACIT	CEAS1R5M50
	C457	ELECTR.CAPACITOR	CEASR22M50
	C458	ELECTR.CAPACITOR	CEAS470M16
	C459,460	MYLOR FILM CAPACITOR	CQMA102J50
	C461,462	ELECTR.CAPACITOR	CEAS4R7M50
	C463,464	ELECTR.CAPACITOR	CEAS470M16
	C465	CERAMIC CAPACITOR	ACG1021
	C466	CERAMIC CAPACITOR	CCCSL221J50
	C468,469	MYLOR FILM CAPACITOR	CQMA182J50
	C471	CERAMIC CAPACITOR	ACG1021
	C472	CERAMIC CAPACITOR	ACG1022
	C473	CERAMIC CAPACITOR	ACG1021
	C475	ELECTR.CAPACITOR	CEAS100M50
	C476	CERAMIC CAPACITOR	ACG1021
	C477	CERAMIC CAPACITOR	CKCYF103Z50
	C478	AUDIO FILM CAPACITOR	CFTXA224J50
	C480	CERAMIC CAPACITOR	ACG1021
	C481,482	CERAMIC CAPACITOR	CCDCH150J50
	C483	CERAMIC CAPACITOR	ACG1017

Mark	No.	Description	Parts No.
	C484	ELECTR.CAPACITOR	CEAS470M16
	C485	CERAMIC CAPACITOR	ACG1021
	C488	CERAMIC CAPACITOR	CKDYF103Z50

RESISTORS

Mark	No.	Description	Parts No.
	VR431	VR(10K)	ACP1025
	VR432	VR	VRTS6VS153
	VR451	VR(4.7K)	ACP1024
		Other resistors	RD1/8PM□□□J

OTHERS

Mark	No.	Description	Parts No.
	X431	CERAMIC RESONATOR	ATF1027
	X471	CRYSTAL RESONATOR	ASS1005
		ANTENNA TERMINAL 2-P	AKA1011
		FE ASSEMBLY	AWB1004
		AM RF tuning block	AXX1011

FE ASSEMBLY (AWB1004)

Note :
FE assembly (AWB1004) is a part of TUNER assembly (AWE1184).

SEMICONDUCTORS

Mark	No.	Description	Parts No.
	Q901	MOS-FET	2SK241
	Q902	TRANSISTOR	2SC2668
	Q903,904	MOS-FET	2SK241
	Q905	TRANSISTOR	2SC2786
	D901−904	VARI-CAP DIODE	1SV147-4

COILS & TRANSFORMER

Mark	No.	Description	Parts No.
	L901	COIL	ATC1001
	L902	COIL	ATC1010
	L903	COIL	ATC-247
	L904	COIL	ATC1003
	L905,906	AXIAL INDUCTOR	LAU2R2M
	T901	COIL	ATC-194
	T902	IF TRANSFORMER	ATE-063

CAPACITORS

Mark	No.	Description	Parts No.
	TC901	CERAMIC TRIMMER	ACM-014
	C901	CERAMIC CAPACITOR	CCDRH100D50
	C902	CERAMIC CAPACITOR	CCDRH390J50
	C903	CERAMIC CAPACITOR	CKDYF103Z50
	C904	CERAMIC CAPACITOR	CCDRH390J50
	C905	CERAMIC CAPACITOR	CCDRH330J50
	C906	CERAMIC CAPACITOR	CCDRH390J50
	C907	CERAMIC CAPACITOR	CKDYF223Z50
	C908	CERAMIC CAPACITOR	CCDCH010C50
	C909,910	CERAMIC CAPACITOR	CCDCH020C50
	C911	CERAMIC CAPACITOR	CCDSL101J50
	C912	CERAMIC CAPACITOR	CKDYF103Z50
	C913	CERAMIC CAPACITOR	CCDCH150J50
	C914	CERAMIC CAPACITOR	CCDCH330J50
	C915	CERAMIC CAPACITOR	CCDCH080D50
	C916	CERAMIC CAPACITOR	CCDTH180J50
	C917	CERAMIC CAPACITOR	CCDCH050C50
	C918,919	CERAMIC CAPACITOR	CKDYF103Z50

RESISTORS

Mark	No.	Description	Parts No.
		All resistors	RD1/8PM□□□J

MAIN ASSEMBLY (AWZ3123)

SEMICONDUCTORS

Mark	No.	Description	Parts No.
	IC101,102	E-SW IC	TC9164N
	IC103	E-VR IC	TC9154AP
	IC104	E-TONE CONTROL IC	TC9184P
	IC105	E-VR IC	TC9154AP
	IC106	LOGIC IC	BU4066BL
	IC107	LOGIC IC	TC4028BP
	IC108	OP-AMP IC	NJM4558S-X
	IC109,110	OP-AMP IC	M5220L
	IC111	OP-AMP IC	NJM4558S-X
	IC112	E-SW IC	CX-894
	IC113	REGULATOR IC	M5F78M05L
	IC114	REGURATOR IC	M5F79M05L
	IC115	REGULATOR IC	M5F78M15L
	IC116	REGURATOR IC	M5F79M15L
	IC117	REGULATOR IC	M5F78M12L
	IC118	REGULATOR IC	M5278L56(A)
	Q101	TRANSISTOR	RN1203
	Q102	TRANSISTOR	RN2203
	Q103	TRANSISTOR	RN1203
	Q104	TRANSISTOR	RN2203
	Q105,106	TRANSISTOR	2SC2603
	Q107	TRANSISTOR	2SD438
	Q108−110	TRANSISTOR	2SC2458
	Q111	TRANSISTOR	2SA1048
	Q112−117	TRANSISTOR	2SC2458
	Q118	TRANSISTOR	2SA1048
	Q119	TRANSISTOR	2SC2458
	Q120	TRANSISTOR	RN1203
	Q121	TRANSISTOR	2SC2458
	Q122	TRANSISTOR	2SA1048
	Q123,124	TRANSISTOR	2SC2458
	Q125	TRANSISTOR	2SA1048
	Q126−128	TRANSISTOR	2SC2458
	D101,102	ZENER DIODE	RD5.1ESB2
	D103−106	DIODE	10E2FD
	D107,108	DIODE	1S2471
	D109	DIODE	D5SB20F
	D110−113	DIODE	1SS252
	D114	ZENER DIODE	HZS9AL
	D115	DIODE	1SS252

Mark	No.
	D116
	D117
	D118−
	D122
	D123
	D124, 128, 132
	D133
	D134,1

RELAIES

Mark	No.
	RY101
	RY102

COILS

Mark	No.
	L101−

CAPACITOR

Mark	No.
	C101−
	C107,1
	C109−
	C115−
	C129−
	C135,1
	C137,1
	C139,1
	C141,1
	C143,1
	C145,1
	C147−
	C151−
	C157
	C158,1
	C160
	C161
	C162,1
	C164
	C165−
	C169
	C170
	C171
	C172
	C173
	C174
	C175,17
	C177,17
	C179
	C180

Mark	No.	Description	Parts No.
	D116	ZENER DIODE	RD5.1ESB2
	D117	DIODE	1SS252
	D118−121	DIODE	1SR139-400
	D122	DIODE	1SS252
	D123	DIODE	1S1555
	D124, 126−128, 131, 132	DIODE	1SS252
	D133	ZENER DIODE	RD5.1ESB2
	D134,135	DIODE	1SS252

RELAIES

	RY101	RELAY	ASR-112
	RY102	RELAY	ASR1005

COILS

	L101−103	COIL	ATH1009

CAPACITORS

	C101−106	CERAMIC CAPACITOR	CCMSL101J50
	C107,108	CERAMIC CAPACITOR	CCMSL680J50
	C109−114	CERAMIC CAPACITOR	CCMSL101J50
	C115−126	CERAMIC CAPACITOR	CKDYB391K50
	C129−134	ELECTR.CAPACITOR	CEAS4R7M50
	C135,136	ELECTR.CAPACITOR	CEAS2R2M50
	C137,138	CERAMIC CAPACITOR	CCMSL820J50
	C139,140	ELECTR.CAPACITOR	CEAS010M50
	C141,142	MYLOR FILM CAPACITOR	CQMA272K50
	C143,144	ELECTR.CAPACITOR	CEAS100M25
	C145,146	AUDIO FILM CAPACITOR	CFTXA823J50
	C147−150	AUDIO FILM CAPACITOR	CFTXA153J50
	C151−156	ELECTR.CAPACITOR	CEAS4R7M50
	C157	ELECTR.CAPACITOR	CEAS2R2M50
	C158,159	ELECTR.CAPACITOR	CEAS470M16
	C160	CERAMIC CAPACITOR	CKDYX473M16
	C161	ELECTR.CAPACITOR	CEAS010M50
	C162,163	ELECTR.CAPACITOR	CEAS470M10
	C164	ELECTR.CAPACITOR	CEAS010M50
	C165−168	AUDIO FILM CAPACITOR	CFTXA104J50
	C169	ELECTROLYTIC CAPACIT	CEAS471M6
	C170	ELECTROLYTIC CAPACIT	CEANP4R7M50
	C171	CERAMIC CAPACITOR	CKCYF473Z50
	C172	ELECTROLYTIC CAPACIT	CEAS470M35
	C173	ELECTR.CAPACITOR	CEAS101M16
	C174	POLYESTER CAPACITOR	CQMXA104J100
	C175,176	ELECTROLYTIC CAPACIT	ACH1021
	C177,178	CERAMIC CAPACITOR	CKCYF473Z50
	C179	ELECTR.CAPACITOR	CEAS470M10
	C180	ELECTR.CAPACITOR	CEAS470M25
	C181,182	CERAMIC CAPACITOR	CKCYF473Z50
	C183,184	ELECTR.CAPACITOR	CEAS470M16
	C185	CERAMIC CAPACITOR	CKCYF473Z50
	C186	ELECTR.CAPACITOR	CEAS470M16
	C187	ELECTROLYTIC CAPACIT	ACH1157
	C188	ELECTROLYTIC CAPACIT	ACH1158
	C189	POLYESTER CAPACITOR	CQMXA104J100
	C190	ELECTROLYTIC CAPACIT	CEAS471M25
	C191	CERAMIC CAPACITOR	CKCYF103Z50
	C192	ELECTR.CAPACITOR	CEAS470M10
	C193	CEA (47000/5.5V)	ACH1070
	C194−197	ELECTR.CAPACITOR	CEAS470M10
	C198	ELECTR.CAPACITOR	CEAS4R7M50
	C199	ELECTR.CAPACITOR	CEAS220M25
	C200−202	CERAMIC CAPACITOR	CCMSL080D50
	C203	AUDIO FILM CAPACITOR	CFTXA473J50
	C204	ELECTR.CAPACITOR	CEAS101M16
	C205	ELECTR.CAPACITOR	CEAS470M50
	C206	ELECTR.CAPACITOR	CEAS470M25
	C207	ELECTR.CAPACITOR	CEAS2R2M50
	C208,209	CERAMIC CAPACITOR	CKCYF103Z50
	C210	ELECTR.CAPACITOR	CEAS2R2M50

RESISTORS

	R173−176	CARBON FILM RESISTOR	RD1/4PMF4R7J
	R181,182	RESISTOR (0.33, 5W)	ACN-139
	R183−186	METAL OXIDE RESISTOR	RS1LMF100J
	R189,190	CARBON FILM RESISTOR	RD1/4PMF100J
	R203	FUSLIBLE RESISTOR	RFA1/4PS100J
	R204	CARBON FILM RESISTOR	RD1/4PMF100J
	R207−211	CARBON FILM RESISTOR	RD1/4PMF4R7J
	R212, 219, 220	CARBON FILM RESISTOR	RD1/4PMF100J
	R226	FUSLIBLE RESISTOR	RFA1/4PS220J
		Other resistors	RD1/8PM□□□J

OTHERS

		PIN JACK(2P)	AKB1100
		PIN JACK(4P)	AKB1101
		PIN JACK(3P)	AKB1102
		PIN JACK(2P)	AKB1103
		JACK	AKN1006
		AMP ASSEMBLY	AWH1008
		SURR ASSEMBLY	AWX1031
	CN1	JUMPER CONNECTOR	KPC6
	CN2	JUMPER CONNECTOR 3-P	KPC3
	CN5	CONNECTOR(4P)	KPC4
	CN6,7	CONNECTOR(15P)	KPE15

AMP ASSEMBLY (AWH1008)

Note :
AMP assembly (AWH1008) is a part of MAIN assembly (AWZ3123).

SEMICONDUCTORS

	Q601,602	TRANSISTOR	2SA979
	Q603,604	TRANSISTOR	2SC2240
	Q605,606	TRANSISTOR	2SA970
	Q607,608	TRANSISTOR	2SA1145
	Q609,610	TRANSISTOR	2SC2705
⚠	Q611,612	TRANSISTOR	2SC3298
⚠	Q613,614	TRANSISTOR	2SA1306
	Q661,662	TRANSISTOR	2SC2240
	D601−612	DIODE	1SS252
	D661−666	DIODE	1SS252

CAPACITORS

	C601,602	MYLOR FILM CAPACITOR	CQMA102J50
	C603,604	ELECTR.CAPACITOR	CEAS2R2M50
	C605,606	CERAMIC CAPACITOR	CKCYB222K50
	C607,608	ELECTROLYTIC CAPACIT	CEXA471M16
	C609,610	MICA CAPACITOR	CMA100D500
	C611,612	CERAMIC CAPACITOR	CCCSL020C500
	C619−622	CERAMIC CAPACITOR	CCCSL101K500
	C623,624	CERAMIC CAPACITOR	CKCYX473M25
	C625−628	CAPACITOR (CERAMIC)	ACG-009-O
	C629,630	CERAMIC CAPACITOR	CCCSL101J50
	C661,662	ELECTROLYTIC CAPACIT	CEANP2R2M100

RESISTORS

	R601,602	CARBON FILM RESISTOR	RD1/4PM474J
	R603,604	CARBON FILM RESISTOR	RD1/4PM751J
	R605,606	CARBON FILM RESISTOR	RDR1/4PM513J
	R607,608	CARBON FILM RESISTOR	RD1/4PM472J
	R609,610	CARBONFILM RESISTOR	RD1/4PM331J
	R611,612	CARBON FILM RESISTOR	RD1/4PM122J
	R613−616	FUSLIBLE RESISTOR	RFA1/4PS101J
	R617,618	CARBON FILM RESISTOR	RDR1/4PM431J
	R619,620	CARBON FILM RESISTOR	RDR1/2PM123J
	R621,622	FUSLIBLE RESISTOR	RFA1/4PS680J
	R623,624	CARBON FILM RESISTOR	RD1/4PM104J
	R625,626	FUSLIBLE RESISTOR	RFA1/4PS470J
	R641−644	CARBON FILM RESISTOR	RD1/4PMF151J
	R645−648	CARBON FILM RESISTOR	RD1/4PMF101J
	R649−652	FUSLIBLE RESISTOR	RFA1/4PS4R7J
	R661−664	CARBON FILM RESISTOR	RD1/4PMF222J
	R665−670	CARBONFILM RESISTOR	RD1/8PM□□□J

SURR ASSEMBLY (AWX1031)

Note :
SURR assembly (AWX1031) is a part of MAIN assembly (AWZ3123).

SEMICONDUCTORS

	IC501	OP-AMP IC	NJM4558S-X
	IC521	IC	M50199P
	IC522	DRAM IC	LM3364K-15
	IC523	COMPARATOR	M5233P
	IC551	DOLBY-B IC	LA2730
	Q501	TRANSISTOR	2SC1740S
	D521−525	DIODE	1SS252
	D551	ZENER DIODE	RD12ESB

COILS

	L521	AXIAL INDUCTOR	LAU2R2M
	L522	INDUCTOR	LTA822J

CAPACITORS

	C501−503	ELECTR.CAPACITOR	CEAS4R7M50
	C504,505	CERAMIC CAPACITOR	ACG1021
	C521	ELECTR.CAPACITOR	CEAS4R7M50
	C522	MYLOR FILM CAPACITOR	CQMA562J50
	C523	PL.STYRENE CAPACITOR	CQSA561J50
	C525	ELECTR.CAPACITOR	CEANP4R7M35
	C526	AUDIO FILM CAPACITOR	CFTXA104J50
	C527	ELECTR.CAPACITOR	CEAS470M10
	C528	AUDIO FILM CAPACITOR	CFTXA103J50
	C529,530	AUDIO FILM CAPACITOR	CFTXA823J50
	C532	ELECTR.CAPACITOR	CEAS470M10
	C533	AUDIO FILM CAPACITOR	CFTXA104J50
	C534	ELECTR.CAPACITOR	CEANP010M50
	C535	MYLOR FILM CAPACITOR	CQMA562J50
	C536	PL.STYRENE CAPACITOR	CQSA561J50

Mark	No.	Description	Parts No.
	C537	MYLOR FILM CAPACITOR	CQMA562J50
	C538	ELECTR.CAPACITOR	CEAS4R7M50
	C539	ELECTR.CAPACITOR	CEAS101M10
	C540,541	CERAMIC CAPACITOR	ACG1021
	C542	MYLOR FILM CAPACITOR	CQMA183J50
	C551	ELECTR.CAPACITOR	CEAS4R7M50
	C552	ELECTR.CAPACITOR	CEAS100M50
	C553	ELECTR.CAPACITOR	CEASR33M50
	C554	AUDIO FILM CAPACITOR	CFTXA104J50
	C555	AUDIO FILM CAPACITOR	CFTXA333J50
	C556	ELECTR.CAPACITOR	CEAS010M50
	C557	ELECTR.CAPACITOR	CEAS220M16
	C558	ELECTR.CAPACITOR	CEAS101M10
	C559	MYLOR FILM CAPACITOR	CQMA472J50
	C560	AUDIO FILM CAPACITOR	CFTXA333J50
	C561	ELECTR.CAPACITOR	CEAS220M16
	C562	CERAMIC CAPACITOR	CKMYB471K50
	C563	ELECTR.CAPACITOR	CEAS4R7M50
	C564	ELECTR.CAPACITOR	CEAS470M25

RESISTORS

		All resistors	RD1/8PM□□□J

OTHERS

	X521	CERAMIC OSCILLATOR	ASS1016

SP. SW ASSEMBLY

SWITCHES

	S102	PUSH SWITCH	SUL6LXXXS

CAPACITORS

	C211,212	CERAMIC CAPACITOR	CKDYB392K50

RESISTORS

		All resistors	RS2LMF□□□J

OTHER

		JACK	AKN1002

EQ ASSEMBLY

SEMICONDUCTOR

	IC322	OP-AMP-IC	M5220P

Mark	No.	Description	Parts No.

CAPACITORS

	C329,330	ELECTR.CAPACITOR	CEAS100M50
	C331,332	CERAMIC CAPACITOR	CCDSL221J50
	C333,334	ELECTROLYTIC CAPACIT	CEAS471M6
	C335,336	AUDIO FILM CAPACITOR	CFTXA243J50
	C337,338	AUDIO FILM CAPACITOR	CFTXA823J50
	C339,340	ELECTR.CAPACITOR	CEAS2R2M50
	C341,342	CERAMIC CAPACITOR	CKCYF473Z50
	C343	CERAMIC CAPACITOR	CCMSL150J50
	C354	CERAMIC CAPACITOR	CKCYF473Z50
	C355,356	CERAMIC CAPACITOR	CKDYB681K50
	C357,358	CERAMIC CAPACITOR	CKDYB821K50

RESISTORS

	VR301	VARIABLE RESISTOR	ACS1038
		Other resistors	RD1/8PM□□□J

OTHER

		PIN JACK(2P)	AKB1099

FRONT ASSEMBLY (AWZ3158)

SEMICONDUCTORS

	IC301	CONTROL MCU	PDG043-A
	Q301	TRANSISTOR	RN1203
	Q302−308	TRANSISTOR	2SC2458
	Q309	TRANSISTOR	RN1203
	Q313,314	TRANSISTOR	2SC2458
	D301	DIODE	S5566
	D302−317	DIODE	1SS252
	D325,326	DIODE	1SS252

SWITCHES

	S301−303	SWITCH	ASG1029
	S304	SWITCH	ASG-703
	S305−338	SWITCH	ASG1029
	S339	SWITCH	ASG-703
	S340−351	SWITCH	ASG1029

COIL

	L301	AXIAL INDUCTOR	LAU100K

CAPACITORS

	C301	ELECTROLYTIC CAPACIT	CEJA0R1M50
	C302−304	ELECTR.CAPACITOR	CEJA100M16
	C305	ELECTROLYTIC CAPACIT	CEJA220M6

RESISTORS

		All resistors	RD1/8PM□□□J

OTHER

Mark	No.	Description	Parts No.
	V301	FL TUBE	AAV1081
	X301	CERAMIC OSCILLATOR	ASS1022
		REMOTE RECEIVER UNIT	AXX1010

REAR AMP ASSEMBLY

SEMICONDUCTORS

Mark	No.	Description	Parts No.
	IC321	PREDRIVER-IC	UPC1270H
	Q321	TRANSISTOR	2SC2458
	Q322	TRANSISTOR	2SC2240
	D321	DIODE	1S2471
	D322,323	DIODE	1SS252

CAPACITORS

Mark	No.	Description	Parts No.
	C321	ELECTR.CAPACITOR	CEAS2R2M50
	C322	CERAMIC CAPACITOR	CKCYB102K50
	C323	ELECTR.CAPACITOR	CEAS101M10
	C324	CERAMIC CAPACITOR	CCCSL270J50
	C325	MYLOR FILM CAPACITOR	CQMA333K50
	C326,327	CERAMIC CAPACITOR	CKDYF473Z50
	C328	ELECTR.CAPACITOR	CEANP2R2M50
	C359	CERAMIC CAPACITOR	CCDSL101J50

RESISTORS

Mark	No.	Description	Parts No.
	R329	RESISTOR (0.22, 2W)	ACN-131
		Other resistors	RD1/8PM□□□J

OTHER

Mark	No.	Description	Parts No.
		TRANSISTOR SOCKET	AKH-017

VOL ASSEMBLY

SEMICONDUCTORS

Mark	No.	Description	Parts No.
	IC323	OP-AMP IC	M5220L
	IC324	MECHANISM DRIVER IC	TA7291S

CAPACITORS

Mark	No.	Description	Parts No.
	C345,346	CERAMIC CAPACITOR	CKCYB103K50
	C347,348	ELECTR.CAPACITOR	CEAS4R7M50
	C349,350	CERAMIC CAPACITOR	CKCYB331K50
	C351	ELECTR.CAPACITOR	CEAS470M16
	C352	ELECTR.CAPACITOR	CEANP2R2M50

RESISTORS

Mark	No.	Description	Parts No.
	VR302	VARIABLE RESISTOR	ACX1033
	R353	CARBON FILM RESISTOR	RD1/4PMF2R2J
		Other resistors	RD1/8PM□□□J

OTHER

Mark	No.	Description	Parts No.
	CN8	CONNECTOR(3P)	KPE3

SP A, B ASSEMBLY

COILS

Mark	No.	Description	Parts No.
	L951−954	COIL	ATH-133

CAPACITORS

Mark	No.	Description	Parts No.
	C951−954	CERAMIC CAPACITOR	CKDYF103Z50
	C955−958	CERAMIC CAPACITOR	CKDYB102K50

RESISTORS

Mark	No.	Description	Parts No.
	R951−954	CARBON FILM RESISTOR	RD1/2PMF101J
	R955−958	CARBON FILM RESISTOR	RD1/4PMF100J

OTHER

Mark	No.	Description	Parts No.
		SPEAKER TERMINAL 8-P	AKE-111

REAR SP ASSEMBLY

COIL

Mark	No.	Description	Parts No.
	L961	COIL	ATH-133

CAPACITORS

Mark	No.	Description	Parts No.
	C961	CERAMIC CAPACITOR	CKDYF103Z50
	C963	CERAMIC CAPACITOR	CKDYB102K50
	C965	CERAMIC CAPACITOR	CCDSL101J50

RESISTORS

Mark	No.	Description	Parts No.
		All resistors	RD1/4PMF100J

OTHERS

Mark	No.	Description	Parts No.
		SPEAKER TERMINAL 4-P	AKE1025
	CN3	CONNECTOR(4P)	KPC4

PRIMARY ASSEMBLY

RELAY

Mark	No.	Description	Parts No.
	RY301	RELAY	ASR1027

COIL & TRANSFORMER

Mark	No.	Description	Parts No.
	L351	FILTER	ATF-151
	T301	POWER TRANSFORMER	ATT1136

CAPACITORS

Mark	No.	Description	Parts No.
	C353	CKA (0.01/AC400V)	ACG1002
	C357	FLM CAP.(0.1/250V)	ACE-507

6. ADJUSTMENTS

6.1 TUNER SECTION

1. Wiring ······ Connect the wires as shown in Fig.1 (FM ANT. terminal: 75Ω).
2. Preset ······ Set the VR451 to center position.

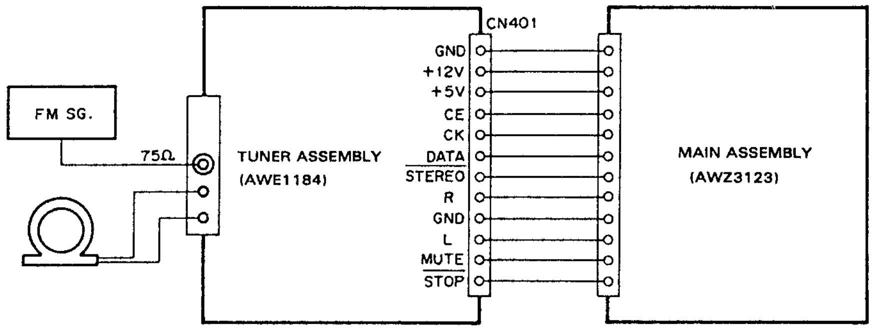
FM SG.
75Ω
TUNER ASSEMBLY
(AWE1184)
CN401
GND
+12V
+5V
CE
CK
DATA
STEREO
R
GND
L
MUTE
STOP
MAIN ASSEMBLY
(AWZ3123)

Note: Stereo modulation: Main 1kHz L+R ±68.25kHz
Pilet 19 kHz ±6.75kHz

FM Section

Order		Item	SSG			Receiving frequency	Adjustment	
			Frequency	Modulation	Level		Adjustment location	Remarks
1		Checking front end VT	No signal			108MHz	——	Check that the voltage between terminal 41 and ground is 8.7 ±2.0V.
2		Checking front end VT				87.5MHz	——	Check that the voltage between terminal 41 and ground is 3.4±1.5V.
3	1	Increasing front end sensitivity	90MHz	1KHz ±75KHz dev.	30 to 40dB	90MHz	L902,L903, T901,T902 (AWB1004)	Adjustment until DC voltage between terminal 43(S−METER) and ground is at maximum.
	2		106MHz			106MHz	TC901, T901,L903 (AWB1004)	
	3		90MHz			90MHz	L902 (AWB1004)	
	4		Repeat step 2 and 3 until the DC voltage between terminal43(S−METER) and GND is at maximum. Step 2 should always be the last step performed.					
4		Center adjustment	98MHz		60dBμV	98MHz	L431	Adjust the voltage between terminals 45 and 46 to 0±50mV.
5		Checking monophonic distortion	98MHz	1kHz ±75kHz dev.	60dBμV	98MHz	——	Check that the monophonic distortion is as specified.
6		Adjusting VCO		OFF	60dBμV		VR451	Adjust the output of terminal 44 to 76.0kHz±1.0kHz.

Order	Item	SSG			Receiving frequency	Adjustment	
		Frequency	Modulation	Level		Adjustment location	Remarks
7	Adjusting stereo distortion	98MHz	L−ONLY R−ONLY	60dBμV	98MHz	T902 (AWB1004)	Minimize the distortion within 1/4 rotation of the core,and check conformity to the specification.
8	Checking separation	98MHz	L−ONLY R−ONLY	60dBμV	98MHz	——	Check that the separation of L→R and R→L is as specified.
9	Checking lighting levels of TUNED and STEREO IND.	98MHz	STEREO		98MHz	VR432	Adjust the lighting level of TUNED and STEREO IND. to 10dBμV $^{+6}_{-4}$ dB.

AM Section

Order	Item	SSG			Receiving frequency	Adjustment	
		Frequency	Modulation	Level		Adjustment location	Remarks
1	Checking front end VT	No signal			1700kHz	——	Check that the voltage between terminal 41 and ground is 7.5 ±1.0V.
2	Checking front end VT				530kHz	——	Check that the voltage between terminal 41 and ground is 1.5±0.5V.
3	Checking front end sensitivity	999kHz	400Hz 30% MOD.	Practical sensitivity level	999kHz	——	Check that the practical sensitivity (maximum sensitivity) is as specified.
4	Adjusting lighting level of TUNED IND.	999kHz			999kHz	VR431	Adjust the lighting level of TUNED IND. to 55dBμV/m ±3dB.

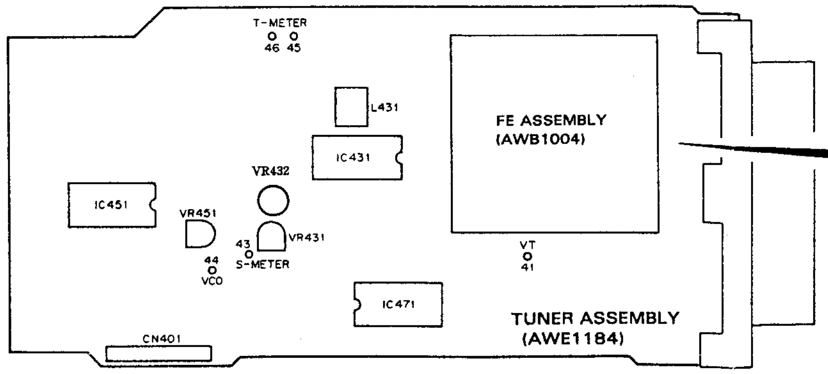
T-METER
46 45
L431
IC431
VR432
IC451
VR451
VR431
43
S-METER
44
VCO
FE ASSEMBLY
(AWB1004)
VT
41
IC471
TUNER ASSEMBLY
(AWE1184)
CN401

Fig. 6−1 adjustment point

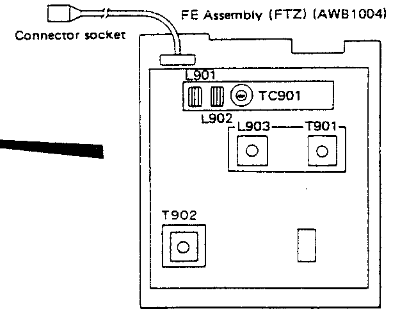
FE Assembly (FTZ) (AWB1004)
Connector socket
L901
TC901
L902
L903
T901
T902

Fig.6−2 Adjustment point of FE Assembly

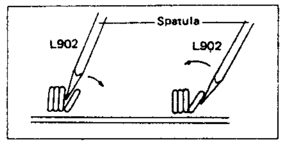
Spatula
L902
L902

To make the output maximum by opening and closing of the first right side turn of the coil.

Fig. 6−3 Adjustment tuning coil L902

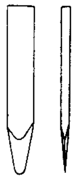

Use a spatula whose an edge is thin. The spatula is not metal (ex. Glass-Cloth Epoxy Resin).

SPATULA

6. RÉGLAGE

6.1 TUNER

1. Cablâge ······ Brancher les câbles comme indiqué dans la Fig. 1 (borne FM. ANT: 75Ω).
2. Préréglage······Placer le VR451 dans la position.

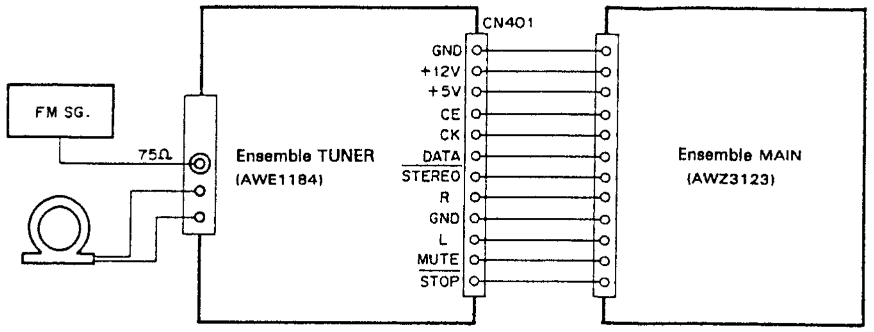

Section FM

Remarque : modulation stéréo : signal principal 1kHz D+G ±68,25kHz
Signal pilote 19 kHz ±6,75kHz

Ordre		Article	SSG			Fréquence reçue	Réglage	
			Fréquence	Modulation	Niveau		Emplacement du réglage	Observations
1		Vérification de la tension frontale	Pas de signal			108MHz	——	Vérifier que la tension entre la borne 41 et la masse est de 8,7 ±2,0V.
2		Vérification de la tension frontale				87.5MHz	——	Vérifier que la tension entre la borne 41 et la masse est de 3,4±1,5V.
3	1	Augmention de la sensibilité frontable	90MHz	Dév. de 1kHz ±75KHz	De 30à 40dB	90MHz	L902,L903, T901,T902 (AWB1004)	Régler jusqu'à ce que la tension CC entre la borne 43 (S−METER) et la masse est au maximum.
	2		106MHz			106MHz	TC901, T901,L903 (AWB1004)	
	3		90MHz			90MHz	L902 (AWB1004)	
	4		Répéter les étapes 2 et 3 jusqu' ce que la tension CC entre la borne 43 (S−METER) et GND est au maximum. Il faudra toujours effectuer l'étape 2 en dernier.					
4		Réglage du centre	98MHz		60dBμV	98MHz	L431	Régler la tension entre les bornes 45 et 46 à 0±50mV.
5		Vérification de la distortion monophonique	98MHz	Dév. de 1kHz ±75kHz.	60dBμV	98MHz	——	Vérifier que la distortion monophonique est comme spécifiée.
6		Réglage de l'oscillateur de régulation de tension		ARRET	60dBμV		VR451	Régler la sortie de la borne 44 à 76,0kHz±1,0kHz.
7		Réglage de la distortion stéréophonique	98MHz	GAUCHE SEULEMENT DROITE SEULEMENT	60dBμV	98MHz	T902 (AWB1004)	Minimiser la distortion en 1/4 de tour du noyau et vérifier la conformité avec la spécification.

Ordre	Article	SSG			Fréquence reçue	Réglage	
		Fréquence	Modulation	Niveau		Emplacement du réglage	Observations
8	Vérification de la séparation	98MHz	GAUCHE SEULEMENT DROITE EULEMENT	60dBμV	98MHz	——	Vérifier que la séparation de L→R et R→L est comme spécifiée.
9	Vérification des niveaux d'éclaraige de TUNED et STEREO IND.	98MHz	STEREO		98MHz	VR432	Régler les niveaux d'éclairage de TUNED ET STEREO IND. à 10dBμV $^{+6}_{-4}$ dB.

AM Section

Ordre	Article	SSG			Fréquence reçue	Réglage	
		Fréquence	Modulation	Niveau		Emplacement du réglage	Observatios
1	Vérification de la tension frontale	Pas de signal			1700kHz	——	Vérifier que la tension entre la borne 41 et la masse est de 7,5 ±1,0V.
2	Vérification de la tension frontale				530kHz	——	Vérifier que la tension entre la borne 41 et la masse est de 1,5±0,5V.
3	Vérification de la senbilité frontale	999kHz	400Hz 30% de MOD.	Niveau de sensibilité réelle	999kHz	——	Vérifier que la sensibilité réelle (sensibilité maximum) est comme spécifiée.
4	Réglage du niveau d'éclairage de TUNED IND.	999kHz			999kHz	VR431	Réglaer le niveau d'éclairage de TUNED IND. à 55dBμV/m ±3dB.

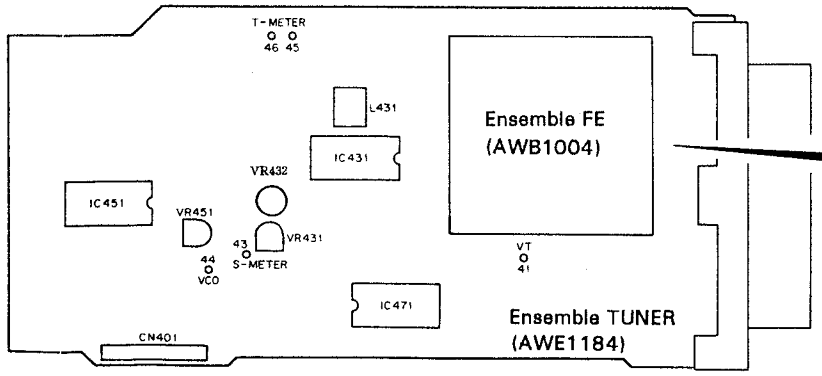

Fig. 6−1 Pointe de réglemente

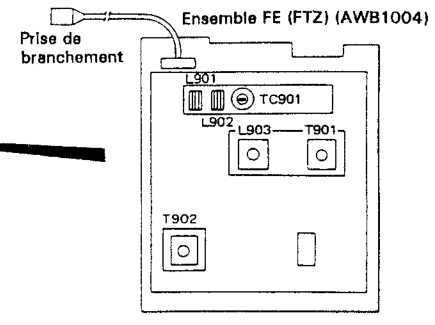

Fig. 6−2 Point de réglage de l'ensemble FE

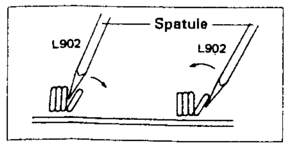

Rendre la sortie maximum enécartant et ramenant la première boucle de droite de la bobine.

Fig. 6−3 Réglage de la bobine de syntonisation L902

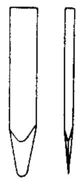

Utiliser une spatule dont l'extrémité est mince.
La spatule n'est pas métallique
(ex. : résines époxydes en toile verrée).

SPATULE

6. AJUSTE

6.1 SECCIÓN DEL SINTONIZADOR

1. Cableado …… Conecte los cables como se muestra en la Fig. 1 (Terminal FM ANT. : 75Ω).
2. Preajuste …… Ajuste el VR451 a la posición central.

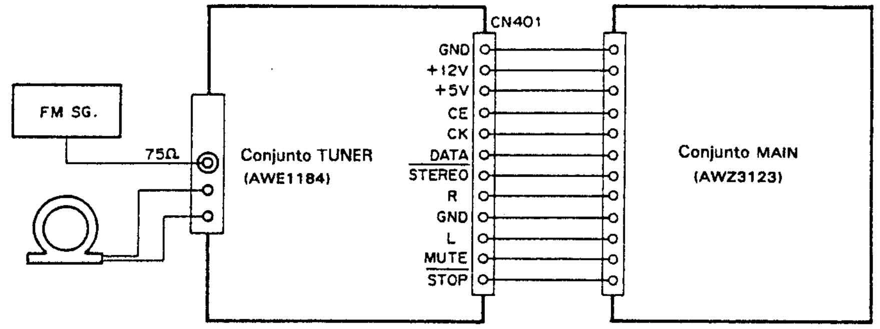

Sección de FM

Nota : Modulación estereofónica : Principal 1kHz D+I ±68,25kHz
Piloto 19 kHz ±6,75kHz

Orden		Item	SSG			Frecuencia de recepción	Ajuste	
			Frecuencia	Modulación	Nivel		Punto de ajuste	Observaciones
1		Verificación de VT de extremo delantero	Sin señal			108MHz	——	Verifique que la tensión entre el terminal 41 y la puesta a tierra sea de 8,7 ±2,0V.
2		Verificación de VT de extremo delantero				87.5MHz	——	Verifique que la tensión entre el terminal 41 y la puesta a tierrasea de 3,4±1,5V.
3	1	Aumentando la sensibilidad del extremo delantero	90MHz	1KHz ±75KHz de desv.	30 a 40dB	90MHz	L902,L903, T901,T902 (AWB1004)	Ajuste hasta que la tensión de CC entre el terminal 43 (S−METER) y la puesta a tierra se encuentre al máximo.
	2		106MHz			106MHz	TC901, T901,L903 (AWB1004)	
	3		90MHz			90MHz	L902 (AWB1004)	
	4		Repita los pasos 2 y 3 hasta que la tensión de CC entre el terminal 43 (S−METER) y GND se encuentre al máximo. El paso 2 debe ser siempre el último paso realizado.					
4		Ajuste central	98MHz		60dBμV	98MHz	L431	Ajuste la tensión entre los terminales 45 y 48 a 0±50mV.
5		Verificación de distorsión monofónica	98MHz	1kHz ±75kHz de desv.	60dBμV	98MHz	——	Verifique que la distorsión monofónica sea la especificada.
6		Ajuste de VCC		DESACTIV	60dBμV		VR451	Ajuste la salida del terminal 44 a 76,0kHz±1,0kHz.
7		Ajuste de distorsión estereofónica	98MHz	I−Solamente D−Solamente	60dBμV	98MHz	T902 (AWB1004)	Miminice la distorsión dentro de 1/4 de distorsión del núcleo, y verifique conforme a la especificación.
8		Verificación de separación	98MHz	I−Solamente D−Solamente	60dBμV	98MHz	——	Verifique que la separación de I→D y D→I sea de acuerdo a la especificación.
9		Verificación de niveles de iluminación de TUNED y STEREO IND.	98MHz	ESTEREO		98MHz	VR432	Ajuste el nivel de iluminación de TUNED y STEREO IND. a 10dBμV $^{+6}_{-4}$ dB.

Sección de AM

Orden	Item	SSG			Frencuencia de recepción	Ajuste	
		Frecuencia	Modulación	Nivel		Punto de ajuste	Observaciones
1	Verificación de VT de extremo delantero	Sin señal			1700kHz	——	Ve rifique que la tención entre el terminal 41 y la puesta a tierra sea de7,5 ±1,0V.
2	Verificación de VT de extremo delantero				530kHz	——	Verifique que la tensión entre el terminal 41 y la puesta a tierra sea de 1,5±0,5V.
3	Verificación de sensibilidad de extremo delantero	999kHz	400Hz 30% de MOD.	Nivel de sensibilidad práctica	999kHz	——	Verifique que la sensibilidad práctica (sensibilidad máxima) sea la especificada.
4	Verificación de niveles de iluminación de TUNED IND.	999kHz			999kHz	VR431	Ajuste el nivel de iluminación de TUNED IND. a 55dBμV/m ±3dB.

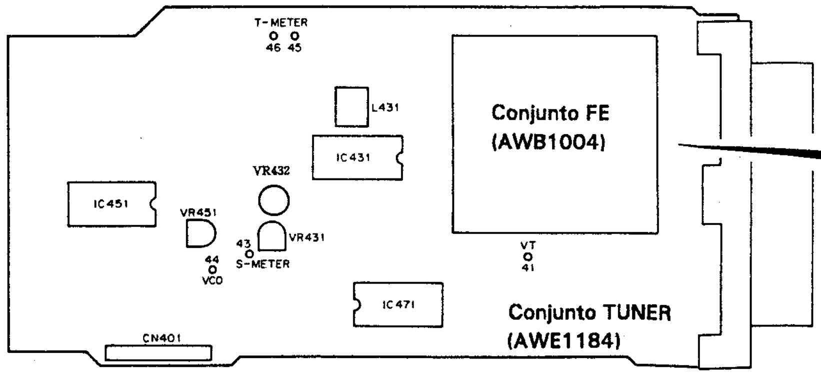

Fig. 6−1 Puntos de ajuste

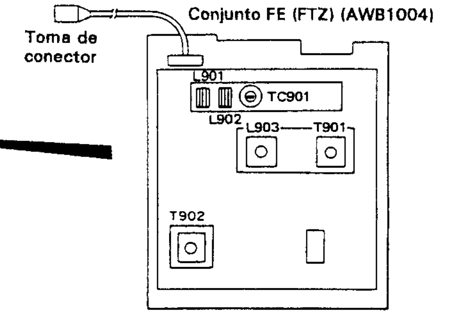

Fig. 6−2 Punto de ajuste del conjunto FE

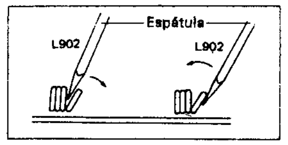

Para producir la máxima salida abriendo y cerrando de la primera espira del lado derecho de la bobina.

Fig. 6−3 Ajuste de la bobina de sintonixación L902

Utilice la espátula cuyo borde sea delgado.
La espátula no es metálica
(ej. resina epóxica para vidrio−paño).

ESPÁTULA

7. IC INFORMATION

<PDG043-A> SYSTEM CONTROL MICROCOMPUTER

- **Pin connections (Top view)**

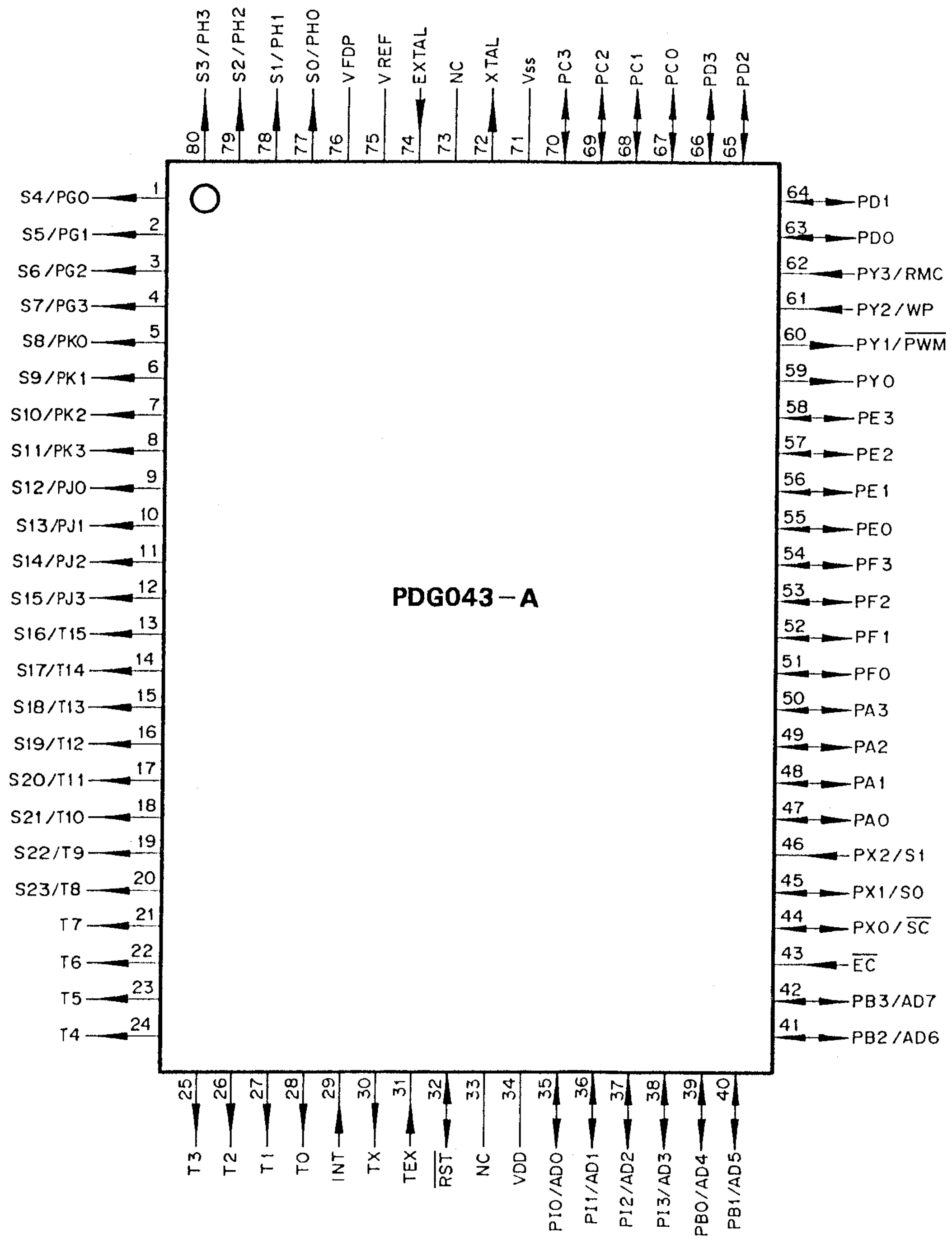
PDG043-A
1 S4/PG0
2 S5/PG1
3 S6/PG2
4 S7/PG3
5 S8/PK0
6 S9/PK1
7 S10/PK2
8 S11/PK3
9 S12/PJ0
10 S13/PJ1
11 S14/PJ2
12 S15/PJ3
13 S16/T15
14 S17/T14
15 S18/T13
16 S19/T12
17 S20/T11
18 S21/T10
19 S22/T9
20 S23/T8
21 T7
22 T6
23 T5
24 T4
25 T3
26 T2
27 T1
28 T0
29 INT
30 TX
31 TEX
32 RST
33 NC
34 VDD
35 PI0/AD0
36 PI1/AD1
37 PI2/AD2
38 PI3/AD3
39 PB0/AD4
40 PB1/AD5
41 PB2/AD6
42 PB3/AD7
43 EC
44 PX0/SC
45 PX1/S0
46 PX2/S1
47 PA0
48 PA1
49 PA2
50 PA3
51 PF0
52 PF1
53 PF2
54 PF3
55 PE0
56 PE1
57 PE2
58 PE3
59 PY0
60 PY1/PWM
61 PY2/WP
62 PY3/RMC
63 PD0
64 PD1
65 PD2
66 PD3
67 PC0
68 PC1
69 PC2
70 PC3
71 Vss
72 XTAL
73 NC
74 EXTAL
75 V REF
76 VFDP
77 S0/PH0
78 S1/PH1
79 S2/PH2
80 S3/PH3

- **Terminal Functions**

Pin No.	Terminal name	I/O	Function	Active
1	S4/PG0	O	FL segment output	H
2	S5/PG1	O		H
3	S6/PG2	O		H
4	S7/PG3	O		H
5	S8/PK0	O		H
6	S9/PK1	O		H
7	S10/PK2	O		H
8	S11/PK3	O		H
9	S12/PJ0	O		H
10	S13/PJ1	O		H
11	S14/PJ2	O		H
12	S15/PJ3	O		H
13	S16/T15	O	FL timing output	H
14	S17/T14	O		H
15	S18/T13	O		H
16	S19/T12	O		H
17	S20/T11	O		H
18	S21/T10	O		H
19	S22/T9	O		H
20	S23/T8	O		H
21	T7	O		H
22	T6	O		H
23	T5	O		H
24	T4	O		H
25	T3	O		H
26	T2	O		H
27	T1	O		H
28	T0	O		H
29	INT	I	Version change	
30	TX	O	Unused(OPEN)	
31	TEX	I	Unused, Connected to GND or VDD	
32	RST	I/O	Reset input	L
33	NC		Unused	
34	VDD		+5V	
35	PI0/AD0	I/O	Level meter input (FRONT L)	
36	PI1/AD1	I/O	Level meter input (FRONT R)	
37	PI2/AD2	I/O	Level meter input (REAR L)	
38	PI3/AD3	I/O	Level meter input (REAR R or CENTER)	
39	PB0/AD4	I/O	Unused	
40	PB1/AD5	I/O	Surround mode control 1	H
41	PB2/AD6	I/O	Surround mode control 2	
42	PB3/AD7	I/O	Surround mode control 3	

Pin No.	Terminal name	I/O	Function	Active
43	$\overline{EC}$	I	Unused(GND)	
44	PX0/$\overline{SC}$	I/O	J/EX or serial clock output	
45	PX1/SO	I/O	ch STEP 9k,50k/10k,100k or serial data output	
46	PX2/SI	I	Stereo	L
47	PA0	I/O	Tuner mute	H
48	PA1	I/O	Stop (TUNED)	L
49	PA2	I/O	Key scan (INPUT)	H
50	PA3	I/O	Version change	
51	PF0	I/O	TC4028 Control signal	
52	PF1	I/O	TC4028 Control signal	
53	PF2	I/O	Surround mode control 4	
54	PF3	I/O	TC4028 Control signal	
55	PE0	I/O	Key scan input	H
56	PE1	I/O		H
57	PE2	I/O		H
58	PE3	I/O		H
59	PY0	O	TV Antenna ON/OFF	H
60	PY1/$\overline{PWM}$	O	VIDEO ENHANCER ON/OFF	H
61	PY2/WP	I	WP Input. Input to AC50Hz or AC60Hz	H
62	PY3/RMC	I	Remote control signal input	L
63	PD0	I/O	VIDEO MUTE	H
64	PD1	I/O	VIDEO Control	
65	PD2	I/O		
66	PD3	I/O		
67	PC0	I/O	VOLUME IND.	H
68	PC1	I/O	VOLUME CONTROL DOWN	L
69	PC2	I/O	VOLUME CONTROL UP	L
70	PC3	I/O	AC (POWER) RY ON/OFF	H
71	Vss		Connected to GND	
72	XTAL	O	MAIN CLOCK output.Connected to 4.19MHZ ceramic resonator	
73	NC		Unused	
74	EXTAL	I	MAIN CLOCK input. Connected to 4.19MHZ ceramic resonator	
75	VREF		Reference voltage input. Connected to VDD	
76	VFDP		Power terminal for FL	
77	S0/PH0	O	Segment output for FL	H
78	S1/PH1	O		H
79	S2/PH2	O		H
80	S3/PH3	O		H

FLUORESCENT INDICATOR TUBE (AAV1081)

Outer dimension

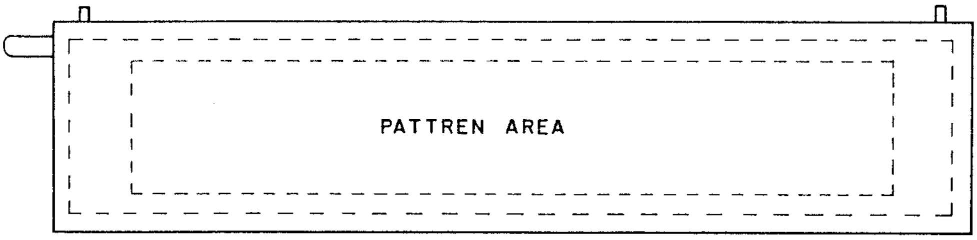
PATTREN AREA

Grid assignment

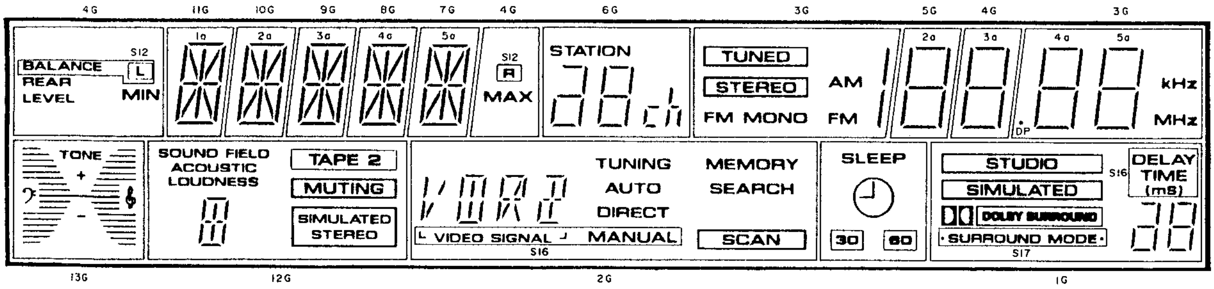
4G
11G
10G
9G
8G
7G
4G
6G
3G
5G
4G
3G
BALANCE
REAR
LEVEL
S12
L
MIN
R
MAX
STATION
TUNED
STEREO
FM MONO
AM
FM
kHz
MHz
DP
TONE
SOUND FIELD
ACOUSTIC
LOUDNESS
TAPE 2
MUTING
SIMULATED STEREO
TUNING
AUTO
DIRECT
MANUAL
MEMORY
SEARCH
SCAN
VIDEO SIGNAL
S16
SLEEP
30
60
STUDIO
SIMULATED
DOLBY SURROUND
SURROUND MODE
S17
DELAY TIME (mS)
13G
12G
2G
1G

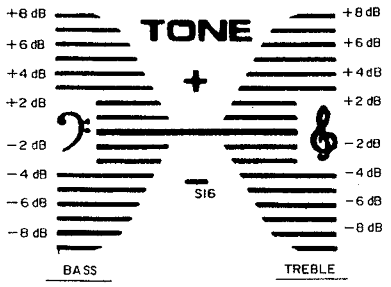
+8 dB
+6 dB
+4 dB
+2 dB
-2 dB
-4 dB
-6 dB
-8 dB
TONE
+
-
S16
BASS
TREBLE

13G

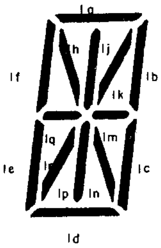
1a
1h
1j
1f
1b
1k
1g
1m
1e
1r
1c
1p
1n
1d

7G~11G AL-XX

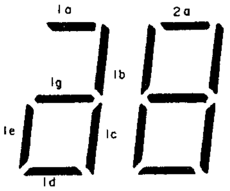
1a
2a
1g
1b
1e
1c
1d

6G ST-XX

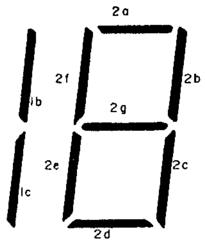
2a
2f
2b
1b
2g
2e
2c
1c
2d

3G~5G Fr-XX

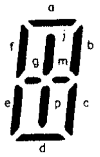
a
j
f
b
g
m
e
p
c
d

12G AC-XX

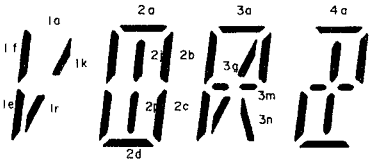
1a
2a
3a
4a
1f
1k
2f
2b
3g
1e
1r
2e
2c
3m
3n
2d

2G VIDEO-XX

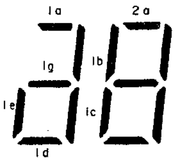
1a
2a
1g
1b
1e
1c
1d

1G DE-XX

Pin connection

PIN NO.	65	64	63	62	61	60	59	58	57	56	55	54	53	52	51	50	49	48	47	46	45	44	43	42	41	40	39	38	37	36	35	34	33	32
CONNECTION	F2	F2	F2	NP	NP	NP	NP	NP	NP	NP	NP	NP	NP	NP	NP	NP	NP	NP	NP	NP	NP	NP	NP	NP	NP	NP	NP	S14	S13	S12	S11	S10	NP	S9

PIN NO.	31	30	29	28	27	26	25	24	23	22	21	20	19	18	17	16	15	14	13	12	11	10	9	8	7	6	5	4	3	2	1
CONNECTION	S8	S7	S6	S5	S4	S3	S2	S1	S16	S15	S0	S17	NP	13G	12G	11G	10G	9G	8G	7G	6G	5G	4G	3G	2G	1G	NP	NP	F1	F1	F1

8. REMOTE CONTROL UNIT (CU–VSX016: AXD1154)

8.1 EXPLODED VIEWS AND PARTS LIST

NOTES:

- *Parts without part number cannot be supplied.*
- *The ⚠ mark found on some component parts indicates the importance of the safety factor of the part. Therefore, when replacing, be sure to use parts of identical designation.*
- *Parts marked by "◉" are not always kept in stock. Their delivery time may be longer than usual or they may be unavailable.*

Parts list of remote control unit

Mark	No.	Parts No.	Description
	1	AZH1033	Case(A)
	2	AZH1034	Case(B)
	3	AZH1035	Case(C)
	4	AZN1400	Filter
	5	AZA1249	Rubber sheet
	6	AZS1042	Knob
	7	AZA1272	Name plate
	8	AZB1124	Screw
	9	AZN1401	Leg
	10	AZB1274	Electrode spring
	11	AZB1275	Electrode spring
	12	AZB1276	Electrode spring
	13	AZB1277	Electrode spring
	14	AAK1439	Sheet
	15	AZA1273	Label

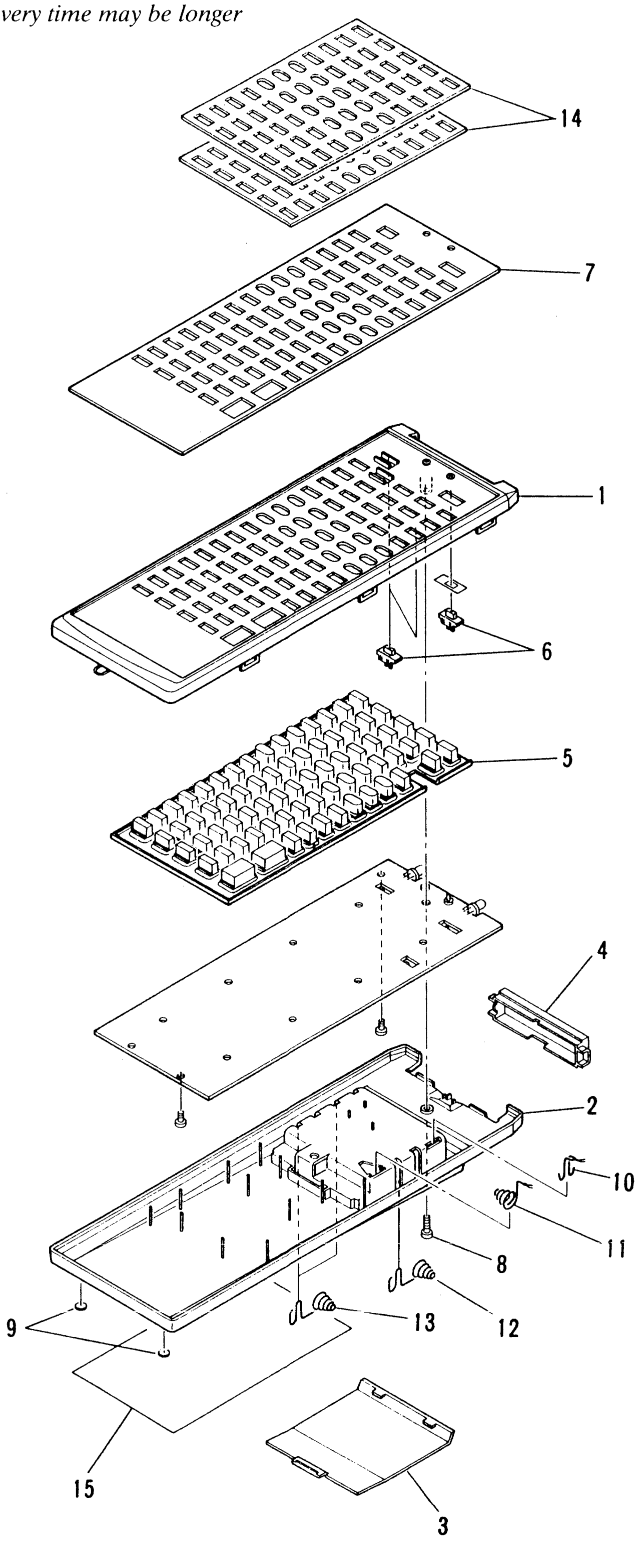

8.2 ELECTRICAL PARTS LIST

NOTES:

- *Parts without part number cannot be supplied.*
- *Parts marked by "◉" are not always kept in stock. Their delivery time may be longer than usual or they may be unavailable.*
- *The ⚠ mark found on some component parts indicates the importance of the safety factor of the part. Therefore, when replacing, be sure to use parts of identical designation.*
- *When ordering resistors, first convert resistance values into code form as shown in the following examples.*

Ex. 1 When there are 2 effective digits (any digit apart from 0), such as 560 ohm and 47k ohm (tolerance is shown by J = 5%, and K = 10%).

560Ω 56 × 10^1 561.......................... RD1/4PS $\boxed{5}\boxed{6}\boxed{1}$ *J*
47kΩ 47 × 10^3 473.......................... RD1/4PS $\boxed{4}\boxed{7}\boxed{3}$ *J*
0.5Ω 0R5.. RN2H $\boxed{0}\boxed{R}\boxed{5}$ *K*
1Ω 010.. RS1P $\boxed{0}\boxed{1}\boxed{0}$ *K*

Ex. 2 When there are 3 effective digits (such as in high precision metal film resistors).

5.62kΩ 562 × 10^1 5621........................ RN1/4SR $\boxed{5}\boxed{6}\boxed{2}\boxed{1}$ *F*

SEMCONDUCTORS

Mark	Symbol & Description	Part No.
	IC01	PD5146A
	IC02	AZC1045
	IC03	AZC1046
	IC04	AZC1047
	IC05	AZC1048
	Q1,Q2	AZC1050
	Q3,Q4	AZC1051
	Q5	AZC1052
	D01,D02,D07–D15	AZC1233
	D03–D06	AZC1049
	PHD01	AZC1055
	LED01,LED02	AZC1054
	IED01,IED02	AZC1053

SWITCHES

Mark	Symbol & Description	Part No.
	S01,S02 Slide switch	AZC1079
	S04 Tact switch	AZC1081
	S05 Slide switch	AZC1080

CAPACITORS

Mark	Symbol & Description	Part No.
	C01 (220p)	AZC1058
	C02 (33p)	AZC1059
	C05,C06 (20p)	AZC1060
	C08 (0.01μF)	AZC1061
	C03,C04 (0.001μF)	AZC1062
	C11 (0.01μF)	AZC1063
	C10 (100μF)	AZC1251
	C07 (4.7μF)	AZC1252
	C09 (1000μF)	AZC1255

RESISTORS

Mark	Symbol & Description	Part No.
	R01 (8.2k)	AZC1064
	R02 (4.7k)	AZC1065
	R03,R08 (33k)	AZC1066
	R05,R17 (10k)	AZC1068
	R06 (82k)	AZC1069
	R09 (6.8k)	AZC1070
	R10 (56k)	AZC1071
	R12 (1M)	AZC1072
	R07,R11,R30–R38 (100k)	AZC1073
	R19–R21 (2.2k)	AZC1074
	R13,R16 (680Ω)	AZC1075
	R15 (10Ω)	AZC1076
	R18,R22–R29 (47k)	AZC1077
	R14 (3.9Ω)	AZC1078
	R04 (560k)	AZC1256

OTHERS

Mark	Symbol & Description	Part No.
	X01 Resonator	AZC1057

8.3 SCHEMATIC DIAGRAM

1. RESISTORS:
Indicated in Ω, ¼W, ⅛W, ±5% tolerance unless otherwise noted k : kΩ, M : MΩ, (F) : ±1%, (G) : ±2%, (K) : ±10% (M); ±20% tolerance

2. CAPACITORS:
Indicated in capacity (μF)/voltage (V) unless otherwise noted p : pF
Indication without voltage is 50V except electrolytic capacitor.

3. OTHERS:
➡ : Signal route.
⊘ : Adjusting point.
The ⚠ mark found on some component parts indicates the importance of the safety factor of the part. Therefore, when replacing, be sure to use parts of identical designation.
※ marked capacitors and resistors have parts numbers.

This is the basic schematic diagram, but the actual circuit may vary due to improvements in design.

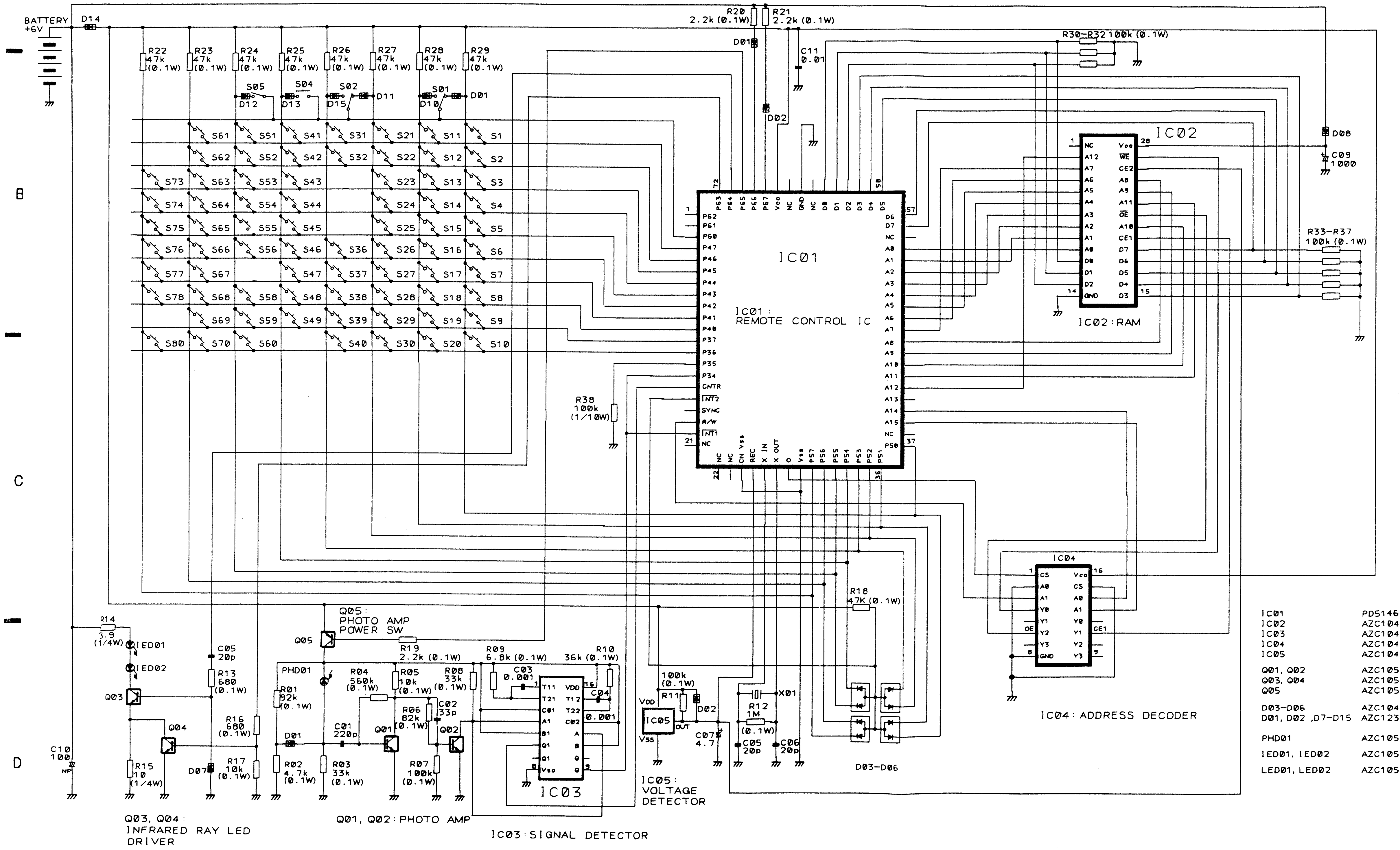
BATTERY +6V
D14
R20 2.2k (0.1W)
R21 2.2k (0.1W)
D01
D02
C11 0.01
R22 47k (0.1W)
R23 47k (0.1W)
R24 47k (0.1W)
R25 47k (0.1W)
R26 47k (0.1W)
R27 47k (0.1W)
R28 47k (0.1W)
R29 47k (0.1W)
S05
S04
S02
S01
D10
D11
D12
D13
D15
R30–R32 100k (0.1W)
IC02
IC02 : RAM
D08
C09 1000
R33–R37 100k (0.1W)
IC01
IC01 : REMOTE CONTROL IC
R38 100k (1/10W)
IC04
IC04 : ADDRESS DECODER
R18 47K (0.1W)
D03–D06
R14 3.9 (1/4W)
IED01
IED02
Q03
Q04
C05 20p
R13 680 (0.1W)
R16 680 (0.1W)
R15 10 (1/4W)
D07
R17 10k (0.1W)
C10 100
Q05
Q05 : PHOTO AMP POWER SW
R19 2.2k (0.1W)
PHD01
R01 82k (0.1W)
D01
R02 4.7k (0.1W)
R04 560k (0.1W)
R05 10k (0.1W)
C01 220p
R03 33k (0.1W)
Q01
R06 82k (0.1W)
C02 33p
R07 100k (0.1W)
Q02
R08 33k (0.1W)
R09 6.8k (0.1W)
C03 0.001
R10 36k (0.1W)
C04 0.001
IC03
R11 100k (0.1W)
D02
IC05
C07 4.7
R12 1M (0.1W)
X01
C05 20p
C06 20p
Q03, Q04 : INFRARED RAY LED DRIVER
Q01, Q02 : PHOTO AMP
IC03 : SIGNAL DETECTOR
IC05 : VOLTAGE DETECTOR

IC01	PD5146A
IC02	AZC1045
IC03	AZC1046
IC04	AZC1047
IC05	AZC1048
Q01, Q02	AZC1050
Q03, Q04	AZC1051
Q05	AZC1052
D03–D06	AZC1049
D01, D02 ,D7–D15	AZC1233
PHD01	AZC1055
IED01, IED02	AZC1053
LED01, LED02	AZC1054

The underline indicates the switch position

S01 : AUDIO/VIDEO/AUX
S02 : SR RECALL/USE/LEARN
S05 : DECK I/DECK II
S04 : RESET

TAPE/VCR
S-1 : VCR POWER
S-2 : ● TAPE/VCR
S-3 : ❚❚ TAPE/VCR
S-4 : ○/VCR CH−
S-5 : VCR CH+
S-6 : ◀◀
S-7 : ◀/ ANT/ TV/VCR
S-8 : ■
S-9 : ▶
S-10 : ▶▶

CD/VDP
S-11 : DISC SEL /DISPLAY CALL
S-12 : ❚❚
S-13 : ⏮ CHP/FR-TM
S-14 : ⏭ /SEARCH
S-15 : PROG
S-16 : ◀◀
S-17 : ■
S-18 : ▶
S-19 : ▶▶

TUNER/CD/TV/VDP
S-20 : 1/13
S-21 : 2/14
S-22 : 3/15
S-23 : 4/16
S-24 : 5/17
S-25 : 6/18
S-26 : 7/19
S-27 : 8/20
S-28 : 9/21
S-29 : 0, 10/22
S-30 : 11/MEMORY/23
S-31 : 12/CLEAR/24

TUNER/CD/PHONO/AMP/TV
S-32 : BAND/DUAL

S-36 : 1·12/13·24/CH−RETURN
S-37 : FREQUENCY−/TV CHANNEL−
S-38 : FREQUENCY+/TV CHANNEL+
S-39 : TV POWER
S-40 : CD+10/ TV FUNC CYCLIC
S-41 : PHONO ■/TV VOL−
S-42 : PHONO ▶/TV VOL+
S-43 : AMP DISPLAY/TV DISPLAY
S-44 : VCR 1
S-45 : VCR 2
S-46 : VCR 3
S-47 : VDP
S-48 : TV
S-49 : VIDEO

S-51 : TAPE 1/DAT
S-52 : TAPE 2
S-53 : LINE
S-54 : CD
S-55 : TUNER
S-56 : PHONO

S-58 : SLEEP
S-59 : RECEIVER POWER
S-60 : MUTING
S-61 : FRONT BAL.R
S-62 : FRONT BAL.L
S-63 : MASTER VOLUME−
S-64 : MASTER VOLUME+
S-65 : REAR LEVEL−
S-66 : REAR LEVEL+
S-67 : SURROUND MODE
S-68 : SURROUND DELAY TIME
S-69 : REAR BAL.R
S-70 : REAR BAL.L

S-73 : CENTER LEVEL−
S-74 : CENTER LEVEL+
S-75 : SOUND FIELD
S-76 : ACOUSTIC
S-77 : SP−A
S-78 : SP−B

S-80 : RETURN

8.4 P.C.BOARD PATTERNS

NOTE :

-▭- : Indicates a chip resistor.

-▮- : Indicates a chip capacitor.

⊠ : Indicates a chip transistor.

-▶|- : Indicates a chip diode.

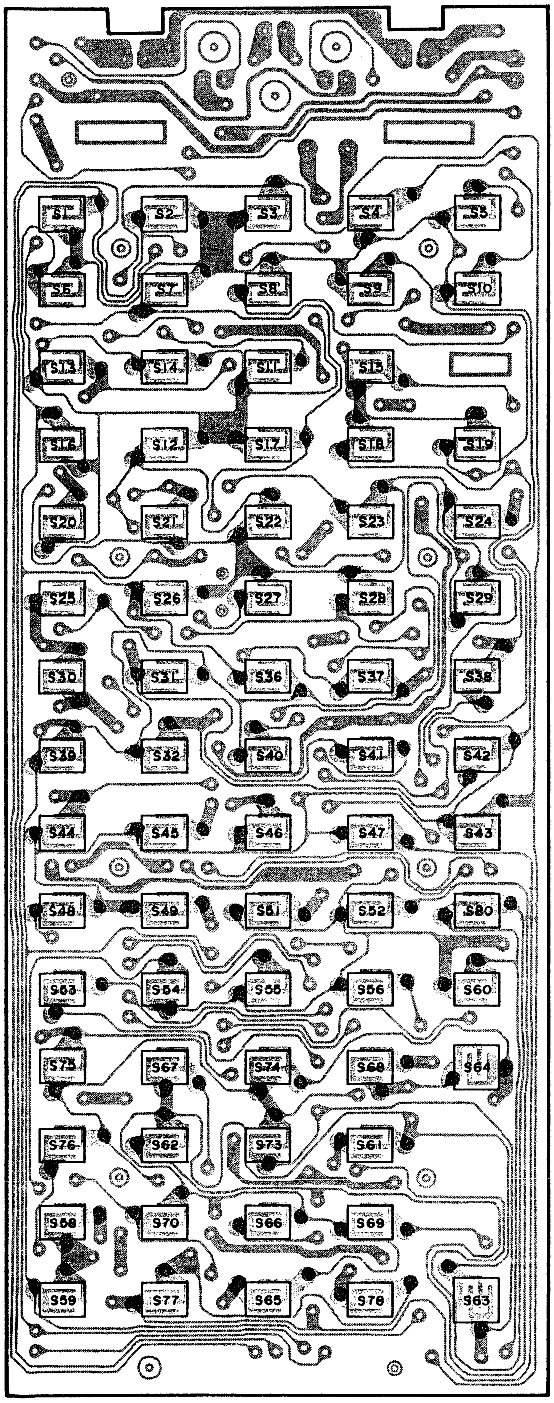
S1
S2
S3
S4
S5
S6
S7
S8
S9
S10
S13
S14
S11
S15
S16
S12
S17
S18
S19
S20
S21
S22
S23
S24
S25
S26
S27
S28
S29
S30
S31
S36
S37
S38
S39
S32
S40
S41
S42
S44
S45
S46
S47
S43
S48
S49
S51
S52
S80
S53
S54
S55
S56
S60
S75
S67
S74
S68
S64
S76
S62
S73
S61
S58
S70
S66
S69
S59
S77
S65
S78
S63

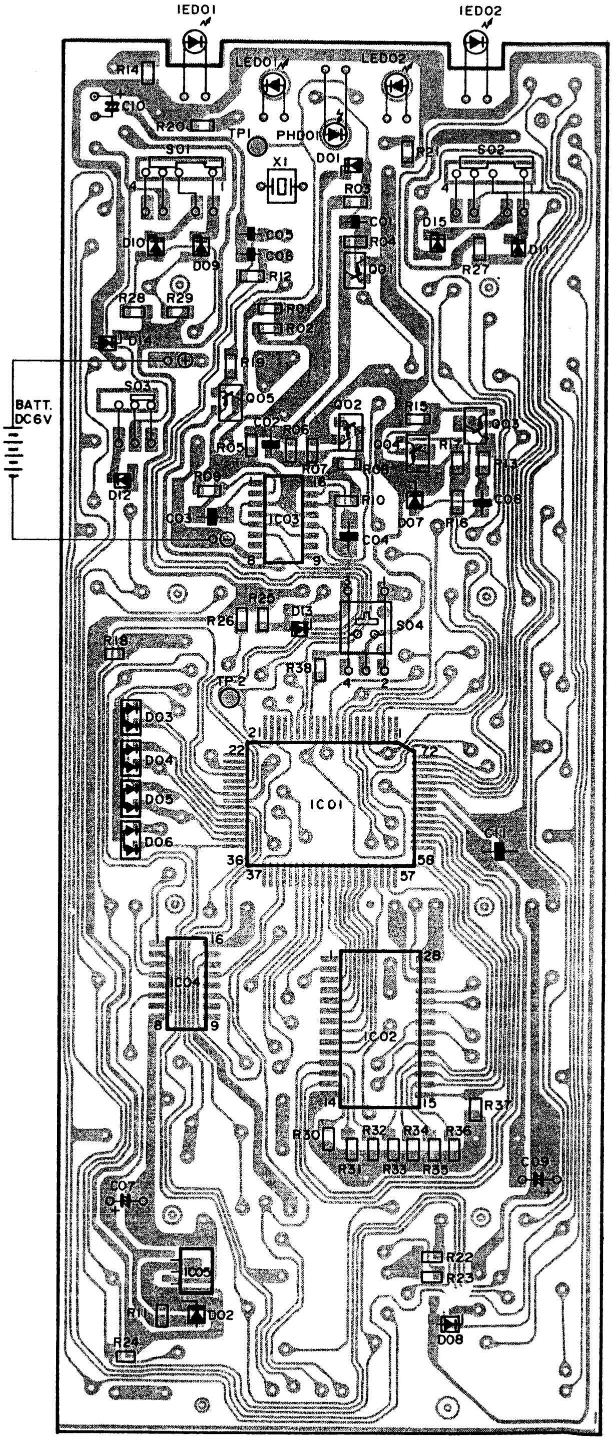
IED01
IED02
LED01
LED02
R14
C10
R20
TP1
PHD01
X1
D01
R21
S01
S02
4
R03
C01
R04
D15
D10
D09
C05
C06
R12
Q01
D11
R27
R28
R29
R01
R02
D14
R19
BATT.
DC6V
S03
Q05
Q02
R15
Q03
C02
R06
Q04
R17
R13
R05
R07
R08
R09
16
R10
C08
D12
C03
IC03
D07
R16
C04
8
9
R25
R26
D13
S04
R18
R38
4
2
TP2
D03
21
22
72
D04
IC01
D05
D06
36
37
57
58
C11
16
28
IC04
8
9
IC02
14
15
R37
R30
R32
R34
R36
R31
R33
R35
C07
C09
R22
R23
IC05
R11
D02
D08
R24

9. PANEL FACILITIES

FRONT PANEL FACILITIES

Illustration shows VSX-4700S

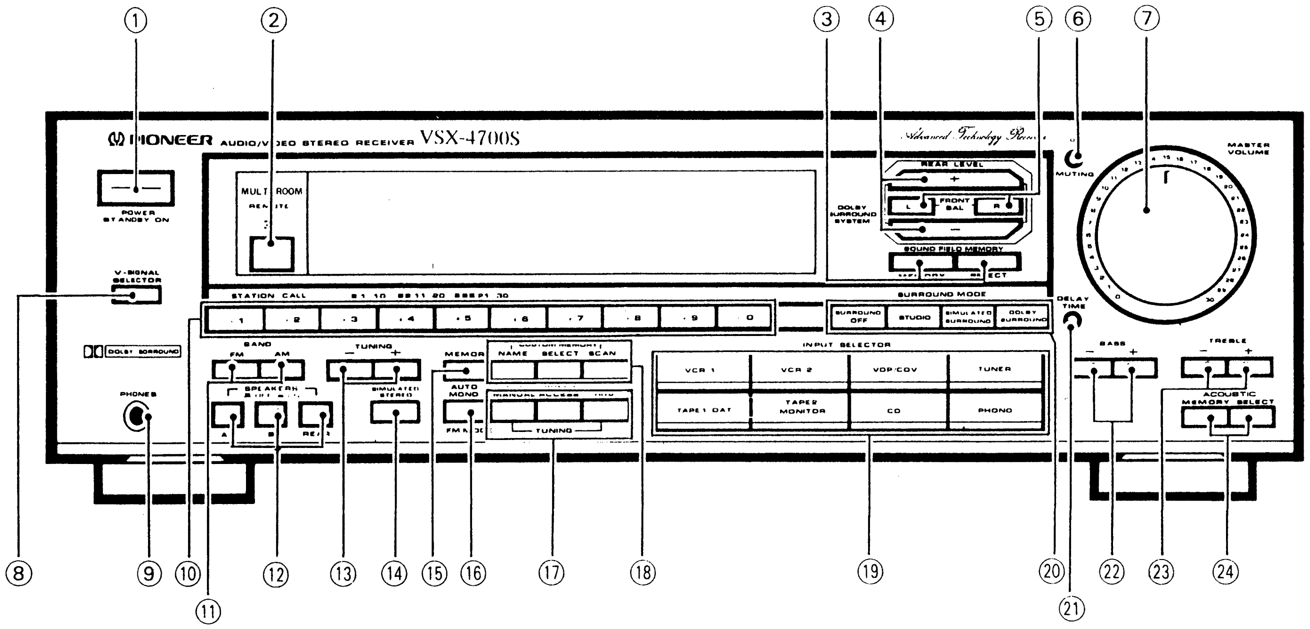
①
②
③
④
⑤
⑥
⑦
PIONEER AUDIO/VIDEO STEREO RECEIVER VSX-4700S
Advanced Technology Receiver
POWER
STANDBY ON
MULTI ROOM
REMOTE
V-SIGNAL SELECTOR
DOLBY SURROUND
PHONES
STATION CALL
BAND
FM AM
SPEAKERS
A B REAR
TUNING
– +
SIMULATED STEREO
MEMORY
AUTO MONO
FM MODE
CUSTOM MEMORY
NAME SELECT SCAN
MANUAL ACCESS
TUNING
INPUT SELECTOR
VCR 1
VCR 2
VDP/CDV
TUNER
TAPE 1 DAT
TAPE 2 MONITOR
CD
PHONO
REAR LEVEL
FRONT BAL
L R
DOLBY SURROUND SYSTEM
SOUND FIELD MEMORY
SELECT
SURROUND MODE
SURROUND OFF
STUDIO
SIMULATED SURROUND
DOLBY SURROUND
MUTING
MASTER VOLUME
DELAY TIME
BASS
TREBLE
ACOUSTIC MEMORY SELECT
⑧
⑨
⑩
⑪
⑫
⑬
⑭
⑮
⑯
⑰
⑱
⑲
⑳
㉑
㉒
㉓
㉔

DISPLAY SECTION

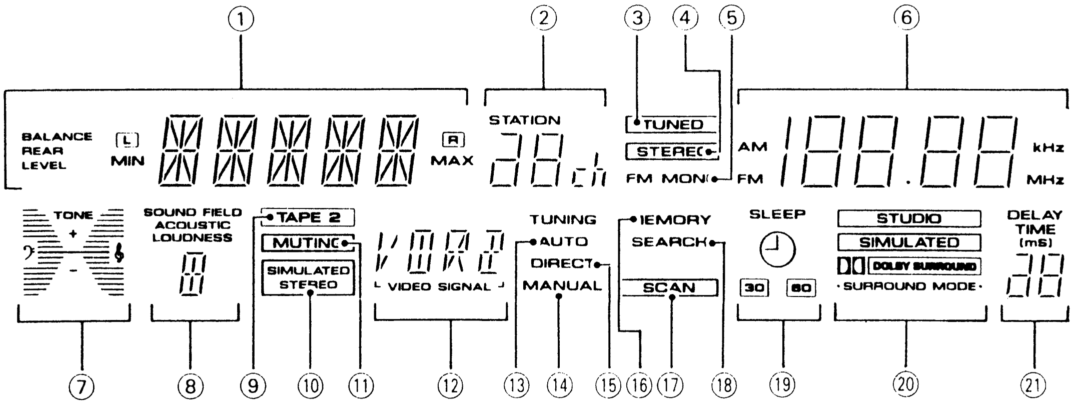
①
②
③
④
⑤
⑥
BALANCE
REAR
LEVEL
L
MIN
R
MAX
STATION
ch
TUNED
STEREO
FM MONO
AM
FM
188.88
kHz
MHz
TONE
+
-
SOUND FIELD
ACOUSTIC
LOUDNESS
TAPE 2
MUTING
SIMULATED STEREO
VIDEO SIGNAL
TUNING
AUTO
DIRECT
MANUAL
MEMORY
SEARCH
SCAN
SLEEP
30
60
STUDIO
SIMULATED
DOLBY SURROUND
SURROUND MODE
DELAY
TIME
(mS)
⑦
⑧
⑨
⑩
⑪
⑫
⑬
⑭
⑮
⑯
⑰
⑱
⑲
⑳
㉑

① POWER STANDBY/ON switch

- When this switch is pressed, power is supplied to the unit. Press the switch again to turn power to standby.

[Timer ON/OFF possible]

When the unit is switched ON, ON/OFF control can be performed by means of the optional timer.

NOTE:

When the power is initially turned ON, muting will be applied to prevent sound from being output for about 5 seconds.

② Remote sensor

③ SOUND FIELD MEMORY switches

MEMORY:

Pressing this switch will result in the memorization of the sound field condition. Press again to cancel this mode.

SELECT:

- This switch is used to preset the five sound field memories (A – E).
- This switch is also used to recall previously set sound field settings. Each time you press the switch, the sound field setting advances in the order shown below.

→ P → A → B → C → D → E ┐

P: The sound field setting previously memorized by the unit.

④ REAR LEVEL (–, +) switches

Operate only when the surround mode is on.

These switches are used to preset the sound level difference between the front and surround speakers. In this way, after presetting the difference, the overall volume of the front and surround speakers can be changed using the MASTER VOLUME control, while still maintaining the sound volume differential.

–: Surround speaker volume is reduced.

+: Surround speaker volume is increased.

Press – and + together to restore front and surround to the default volume balance setting.

⑤ FRONT BAL switches

Use them to adjust the sound volume balance between left and right speakers.

L: Press to decrease the sound on the right side.

R: Press to decrease the sound on the left side.

Press L and R together to bring the volume balance back to center.

NOTE:

The left-right sound volume balance cannot be adjusted on the rear speakers.

⑥ MUTING switch

Press to temporarily cut off the sound volume. The display section MUTING indicator will flash. When pressed again, the sound will return to its previous level.

⑦ MASTER VOLUME control

Use it to simultaneously adjust the sound volume from the front and rear speakers.

⑧ V-SIGNAL (VIDEO SIGNAL) SELECTOR switch

When recording simulcast programs, the recorded image can be selected from among VCR 1, VCR 2 and VDP.

→ VCR 1 → VCR 2 → VDP → OFF ┐

The current setting is shown by an indicator on the display section.

⑨ PHONES jack

Connect the plug on your headphones to this jack. Set all SPEAKERS A, B and REAR switches to OFF if you want to cut the sound from speakers and listen to it only through the headphones.

⑩ STATION CALL switches

Up to 30 FM or AM stations can be preset at random.

These switches are used to preset and recall desired broadcasting stations, FM AUTO/MONO mode.

NOTE:

Pressing a BAND selector switch or STATION CALL switch will select TUNER as the source, regardless of what other listening source or function was selected.

⑪ BAND selector switches

FM: Press for FM reception.

AM: Press for AM reception.

⑫ SPEAKERS switches (A, B, REAR) ■ OFF ▄ ON

ON/OFF switches for the A, B and REAR (surround) speaker systems.

⑬ TUNING switches

+: Performs tuning from the currently displayed station frequency in ascending frequency order.

–: Performs tuning in order of descending frequencies.

⑭ SIMULATED STEREO switch

Press to produce a simulated stereo effect when listening to monaural sources (for example, normal AM or TV broadcasts).

"SIMULATED STEREO" appears on the display section.

NOTE:

- *This effect is not produced through the rear speakers.*
- *Use with the SURROUND MODE in the OFF or SIMULATED SURROUND position (There is no effect in the STUDIO or DOLBY SURROUND positions). With a monaural source, it is more effective if used together with SIMULATED SURROUND.*

⑮ MEMORY switch

When the unit is in the frequency display mode, pressing this switch will result in the memorization of the current broadcast band, reception frequency, and FM AUTO/MONO mode.

This switch is also used to input custom memory names (see page 23).

⑯ FM MODE AUTO/MONO selector switch

Use to select the auto stereo mode or monaural mode when listening to FM broadcasts. The monaural mode has been selected when the FM MONO indicator in the display section is lit.

Auto stereo mode:

Normally, leave in this mode for reception. When a stereo FM broadcast is received, it will be automatically reproduced in stereo.

Monaural mode:

When receiving distant stations or stations with weak broadcast signals, the input signal may be weak, thus resulting in increased noise during FM stereo broadcasts. In this event, setting the receiver to the monaural mode will reduce the noise. In this case, however, FM stereo broadcasts will be reproduced in monaural sound.

NOTE:

This switch has no effect on reception of AM broadcasts.

⑰ TUNING switches

AUTO/MANUAL TUNING selector switch:

This switch is used to select the tuning mode. The TUNING AUTO indicator lights when the AUTO tuning mode has been selected. The MANUAL TUNING indicator lights when the MANUAL tuning mode has been selected.

AUTO tuning

When the – or + TUNING switch is pressed, the receiver automatically scans the broadcast station frequencies. When a broadcast is detected, the scanning stops at that frequency.

NOTE:

Pressing the TUNING switch (– or +) while scanning is taking place causes scanning to stop.

MANUAL tuning

This lets you manually tune to particular broadcast frequencies. Each press of the + or – switch raises or lowers the frequency by one tuning step. For continuous scanning, keep the switch pressed, then release it to stop scanning.

DIRECT ACCESS TUNING switch:

When this switch is pressed, the STATION CALL switches function as ten-key number switches for direct input of the desired reception frequency. Press again to cancel this mode.

If the input station falls outside of the receiver's tuning range, the display section will display a message: "UPPER" if the frequency is too high and "LOWER" if it is too low.

HITS (Hyper Intelligent Tuning System) switch:

- If the HITS switch is pressed during input of numbers for DIRECT ACCESS tuning, the receiver sets the remaining digits which have not yet been input to "0," searches for the corresponding frequencies, and stops on the first station it finds.
- If the HITS switch is pressed at the currently displayed station frequency, the receiver searches up and down the frequency band for the next station (the SEARCH indicator in the display section lights at this time) and stops at the first one it finds.

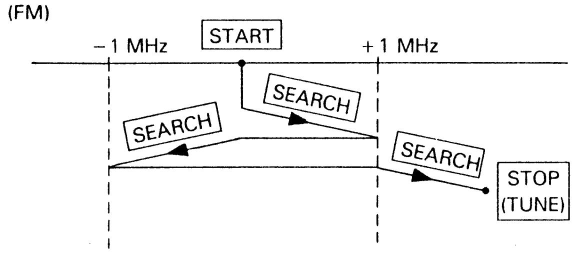

NOTE:

- *The system searches for stations within successive 1 MHz ranges for FM and 100 kHz ranges for AM. During DIRECT ACCESS tuning, it searches up and down for a station until it reaches the edges of the band. If no receivable station is found within the band range, the receiver returns to the state it was in before the HITS switch was pressed.*
- *If the upper (or lower) frequency limit of the receiver is encountered during HITS operation, the receiver stops searching in that direction but continues to search in the other.*

⑱ CUSTOM MEMORY switches

Stations can be assigned to STATION CALL switches according to the genre of material broadcast (for example, ROCK, JAZZ, etc.). You can recall a particular genre, and scan all the stations of that genre with Memory Scan until you reach the desired one.

The initial settings are ROCK, POP, JAZZ, NEWS, and PARTY.

NAME switch

Change the name of a genre with this switch.

SELECT switch

Recall a genre name with this switch.

SCAN switch

Use this switch to carry out Memory Scan within a genre recalled with the SELECT switch.

If it is pressed when "TUNER" is displayed, Memory Scan of successive STATION CALL NUMBERS will occur, not of genre.

⑲ Audio/Video INPUT SELECTOR switches

VCR 1: Press when performing playback on a VCR unit.

VCR 2: Press when performing playback on a second VCR unit.

VDP/CDV: Press when performing playback on a video disc player (VDP) or CDV player.

TUNER: Press when listening to radio broadcasts.

TAPE 1/DAT: Press when performing playback on a DAT or cassette deck.

TAPE 2 MONITOR: Press when performing playback on a second cassette deck or second DAT and when monitoring recording.

CD: Press when playing compact discs on a CD player.

PHONO: Press when playing records on turntable.

⑳ SURROUND MODE selector switches

OFF:

To cancel the surround function.

STUDIO:

Select this setting to enjoy the effect of listening to music in a recording studio.

SIMULATED SURROUND:

Select this setting when listening to music or a monaural source, etc. With a monaural source, a much better surround effect is achieved if it is used together with SIMULATED STEREO.

DOLBY SURROUND:

Select this setting when watching video tapes or video discs bearing the DOLBY SURROUND mark.

㉑ DELAY TIME switch

Operates when the SIMULATED or DOLBY SURROUND mode is ON. Switches to surround delay time in three steps. For DOLBY SURROUND, 20 ms is standard.

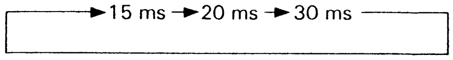

㉒ BASS control switches

Use to adjust the low-frequency level. Press the + switch to increase the low-frequency level, and the – switch to decrease it.

The TONE indicator appears on the display section.

When both switches (+, –) of the BASS control are pressed simultaneously, the bass response will be set to the flat (normal) condition.

㉓ TREBLE control switches

Use to adjust the high-frequency level. Press the + switch to increase the high-frequency level, and the – switch to decrease it.

The TONE indicator appears on the display section.

When both switches (+, –) of the TREBLE control are pressed simultaneously, the treble response will be set to the flat (normal) condition.

㉔ ACOUSTIC switches

MEMORY:

Pressing this switch will result in the memorization of the sound quality (tone control condition). Press again to cancel this mode.

SELECT:

- This switch is used to preset the five acoustic memories (A – E).
- This switch is also used to recall previously set sound quality settings. Each time you press the switch, the sound quality setting advances in the order shown below.

→ FLAT → LOUDNESS → A → B → C → D → E ─┐

FLAT: For flat (normal) frequency response.

LOUDNESS: Emphasizes the low- and high- frequency ranges. Produces a fuller sense of sound, particularly when listening at low volume.

A – E: Memorized acoustic memory settings.

[DISPLAY SECTION]

① CHARACTER/LEVEL/BALANCE display

This displays the name of the component selected with the INPUT SELECTOR. It also displays the level and balance settings during adjustment.

② STATION No. display

Shows the channel selected with the STATION CALL switch.

③ TUNED indicator

Lights up when a station is tuned in during TUNER operation.

④ STEREO indicator

Lights up when a stereo FM broadcast is being received.

⑤ FM MONO indicator

Lights up when the FM MONO mode is selected with the FM MODE switch.

⑥ Frequency display

⑦ TONE level indicator

Shows the settings of the BASS and TREBLE switches.

⑧ SOUND FIELD/ACOUSTIC display

Shows the setting of the SOUND FIELD and ACOUSTIC LOUDNESS.

⑨ TAPE 2 indicator

Lights up when the INPUT SELECTOR is set to TAPE 2 MONITOR ON.

⑩ SIMULATED STEREO indicator

⑪ MUTING indicator

Flashes when MUTING is ON.

⑫ VIDEO SIGNAL SELECTOR indicator

Shows the video component selected with the V-SIGNAL SELECTOR switch.

⑬ AUTO TUNING indicator

Lights up when in the auto tuning mode.

⑭ MANUAL TUNING indicator

Lights up when in the manual tuning mode.

⑮ DIRECT TUNING indicator

Lights up when in the direct access-tuning mode.

⑯ MEMORY indicator

⑰ SCAN indicator

Lights up during memory scan operation.

⑱SEARCH indicator

⑲ SLEEP timer indicators

Shows the SLEEP timer setting (the length of time from the set time to the point at which power will switch off). (The sleep timer can be operated via the remote control.)

⑳ SURROUND MODE indicators

㉑ DELAY TIME display

Shows the delay time during surround operation.

REAR PANEL FACILITIES

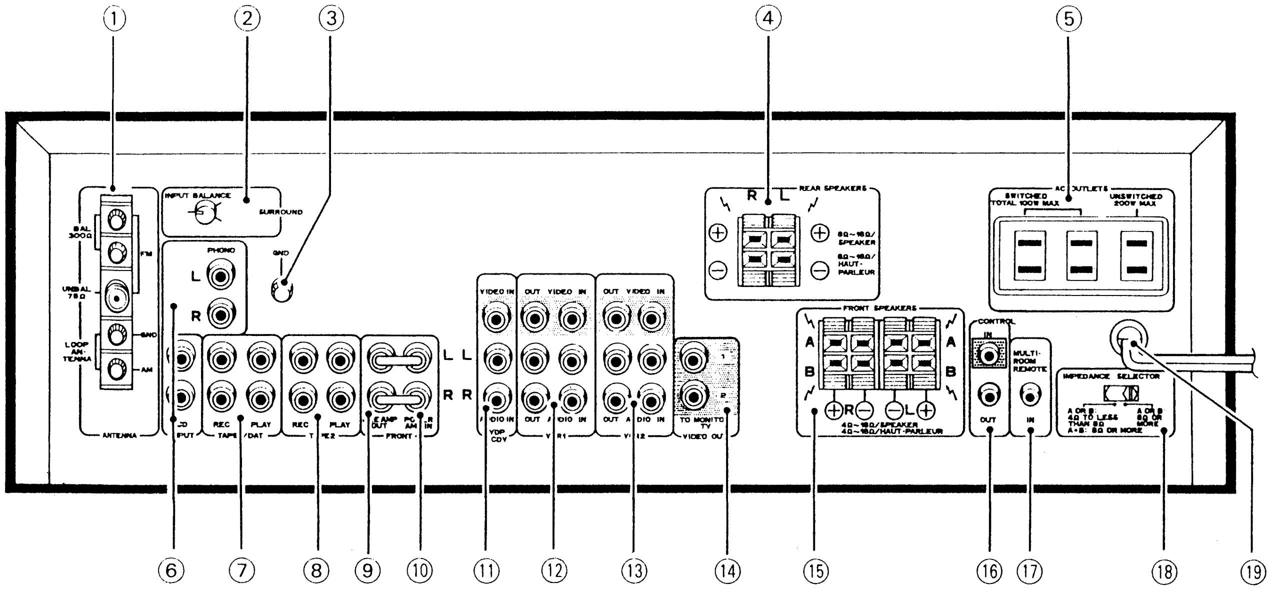
①
②
③
④
⑤
BAL. 300Ω
FM
UNBAL 75Ω
LOOP ANTENNA
GND
AM
ANTENNA
INPUT BALANCE
SURROUND
PHONO
L
R
GND
REAR SPEAKERS
R
L
8Ω~16Ω/SPEAKER
8Ω~16Ω/HAUT-PARLEUR
AC OUTLETS
SWITCHED TOTAL 100W MAX
UNSWITCHED 200W MAX
REC
PLAY
TAPE /DAT
REC
PLAY
PRE AMP OUT
POWER AMP IN
FRONT
L L
R R
VIDEO IN
AUDIO IN
VDP CDV
OUT VIDEO IN
OUT AUDIO IN
OUT VIDEO IN
OUT AUDIO IN
1
2
TO MONITOR TV
VIDEO OUT
FRONT SPEAKERS
A
B
R
L
4Ω~16Ω/SPEAKER
4Ω~16Ω/HAUT-PARLEUR
CONTROL
IN
OUT
MULTI-ROOM REMOTE
IN
IMPEDANCE SELECTOR
A OR B: 4Ω TO LESS THAN 8Ω
A OR B 8Ω OR MORE
A+B: 8Ω OR MORE
⑥
⑦
⑧
⑨
⑩
⑪
⑫
⑬
⑭
⑮
⑯
⑰
⑱
⑲

① FM/AM ANTENNA terminals

Use these antenna terminals for reception of normal FM and AM broadcasts.

② SURROUND INPUT BALANCE control

This knob is for adjusting the balance of the DOLBY SURROUND input signal. To adjust, apply a monaural sound signal and rotate until the SURROUND (rear) sound becomes minimal.

③ GND terminal

Connect the turntable ground lead to this terminal.

④ REAR SPEAKERS terminals

Connect the surround speakers to these terminals.

NOTE:
Do not allow any of the cord's conductors to protrude from the terminals or touch any other conductors. Malfunctioning or breakdowns may occur when conductors come into contact with each other.
Use surround speakers of impedance 8Ω – 16Ω.

⑤ AC OUTLETS

[SWITCHED TOTAL 100 W MAX]
Power supplied through these outlets is turned on and off by the receiver's POWER switch. Total electrical power consumption of connected equipment should not exceed 100 W.
[UNSWITCHED 200 W MAX]
Power flows continually to this outlet, regardless of whether the receiver is switched ON or OFF. Electrical power consumption of the connected equipment should not exceed 200 W.
The equipment should be disconnected by removing the power plug from the wall socket when not in regular use, e.g. when on vacation.

NOTE:
Do not connect appliances with high power consumption such as heaters, irons, or television sets to the AC OUTLETS in order to avoid overheating or fire hazard.
This can cause the receiver to malfunction.

⑥ INPUT jacks

PHONO .... Connect to the output cables from a turntable.
CD .... Connect to the output jacks of a compact disc player.

⑦ TAPE 1/DAT jacks

Use these to connect the first cassette deck or first DAT (digital audio tape) deck.
Connecting for Recording
The tape recording jack (REC) on the cassette deck or DAT should be connected to the REC side of the TAPE 1/DAT jack on the receiver with a pin plug connecting cord.
Connecting for Playback
Connect the PLAY jack on the cassette deck or DAT to the PLAY side of the TAPE 1/DAT jack on the receiver with a pin plug connecting cord.

⑧ TAPE 2 jacks

Connect the second cassette deck to these jacks.
Connecting for Recording
The tape recording jack (REC) on the cassette deck should be connected to the REC side of the TAPE 2 jack on the receiver with a pin plug connecting cord.
Connecting for Playback
Connect the TAPE PLAY jack on the cassette deck to the PLAY side of the TAPE 2 jack on the receiver with a pin plug connecting cord.

⑨ FRONT PRE-AMP OUT jacks

When a separate power amplifier is used to drive the front speakers, connect the power amplifier to these jacks.

⑩ FRONT POWER AMP IN jacks

When a separate pre-amplifier is connected and this unit is used as power amplifier, connect the pre-amplifier to these jacks.

⑪ VDP/CDV jacks

[VIDEO IN]
When watching the video image from a LD player (VDP) or a CDV player, connect its VIDEO OUTPUT jacks here.
[AUDIO IN (L,R)]
When playing back the audio channel from a LD player (VDP) or a CDV player, connect its AUDIO OUTPUT jacks here.

⑫ VCR 1 jacks

[VIDEO OUT]
When copying program material from the video component connected to the VCR 2 or VDP/CDV jacks, connect to the VIDEO INPUT jacks of the VCR used for recording.
[AUDIO OUT (L, R)]
When copying program material from the video component connected to the VCR 2 or VDP/CDV jacks, or when recording music from an audio component source, connect to the AUDIO INPUT jacks of the VCR used for recording.
[VIDEO IN]
When monitoring the video image from a VCR used for playing, connect its VIDEO OUTPUT jacks here.
[AUDIO IN (L, R)]
When monitoring the audio channel from a VCR used for playing, connect its AUDIO OUTPUT jacks here.

⑬ VCR 2 jacks

[VIDEO OUT]
When copying program material from the video component connected to the VCR 1 or VDP/CDV jacks, connect to the VIDEO INPUT jacks of the VCR used for recording.
[AUDIO OUT (L, R)]
When copying program materials from the video component connected to the VCR 1 or VDP/CDV jacks, or when recording music from an audio component source, connect to the AUDIO INPUT jacks of the VCR used for recording.
[VIDEO IN]
When monitoring the video image from a VCR used for copying, connect its VIDEO OUTPUT jacks here.
[AUDIO IN (L, R)]
When monitoring the audio channel from a VCR used for copying, connect its AUDIO OUTPUT jacks here.

⑭ VIDEO OUT TO MONITOR TV jacks

Connect to monitor TV or to TV sets with video input terminals for watching program materials from a VCR or VDP/CDV connected to this unit.

⑮ SPEAKERS (FRONT) terminals

A: Connect to the first set of speakers.
B: Connect to the second set of speakers.

Speaker lead wire preparation and connection.

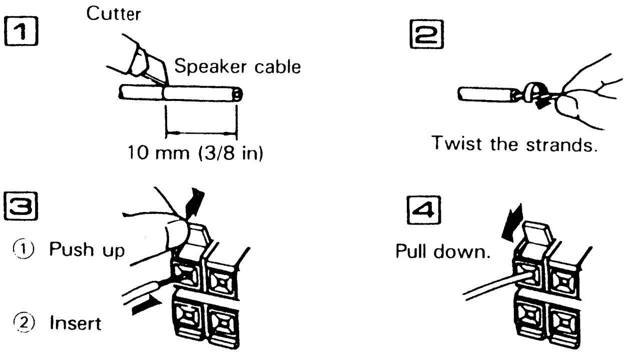
1
Cutter
Speaker cable
10 mm (3/8 in)
2
Twist the strands.
3
① Push up
② Insert
4
Pull down.

NOTE:
Do not allow any of the cord's conductors to protrude from the terminals or touch any other conductors. Malfunctions or breakdowns may occur when conductors come into contact with each other.
Use speakers of impedance 4 Ω – 16 Ω. Also set the IMPEDANCE SELECTOR switch to match the impedance of your speakers.

⑯ REMOTE CONTROL IN/OUT jacks

IN: Connect this jack to other Pioneer components (main unit or remote control unit) when using those components to control this unit.
OUT: Connect this jack to other Pioneer components when using the remote control of this unit to control the other components.

NOTE:
The receiver's remote sensor does not function when a plug is inserted in IN jack. To operate, point the remote control unit at the remote sensor on the component to which the receiver's IN jack is connected.

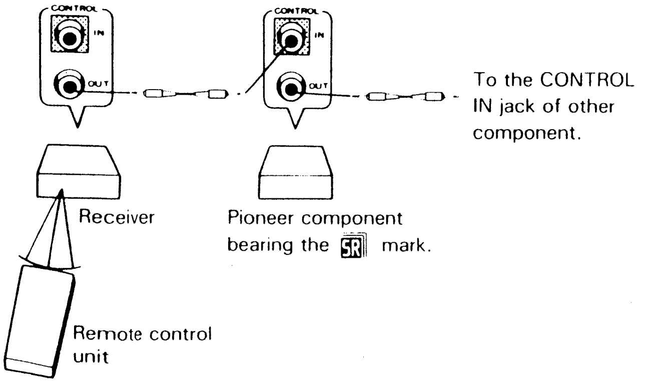
CONTROL
IN
OUT
CONTROL
IN
OUT
To the CONTROL IN jack of other component.
Receiver
Pioneer component bearing the SR mark.
Remote control unit

⑰ MULTI-ROOM REMOTE IN jack

Connect the adaptor (MR-100, sold separately) to this Multi-Remote IN jack. You can operate the unit by remote control through the adaptor. It is convenient when the unit is located in a separate room.

⑱ IMPEDANCE SELECTOR switch

Set this switch to match the impedance of your speakers.

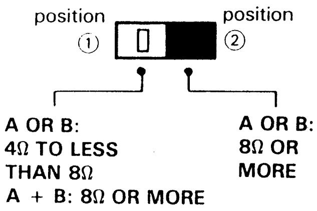
position ①
position ②
A OR B: 4Ω TO LESS THAN 8Ω
A + B: 8Ω OR MORE
A OR B: 8Ω OR MORE

- When using a pair of speakers:

Impedance of a speaker	Selector position
4Ω to less than 8Ω	①
8Ω or more	②

- When using two pairs of speakers:

Select ① as the selector switch position and use speakers having impedance of 8 ohms or more.

NOTE:
Turn off the receiver's power before changing the impedance selector switch setting.

⑲ Power cord

POWER-CORD CAUTION

Handle the power cord by the plug. Do not pull out the plug by tugging the cord and never touch the power cord when your hands are wet as this could cause a short circuit or electric shock. Do not place the unit, a piece of furniture, etc,. on the power cord, or pinch the cord. Never make a knot in the cord or tie it with other cords. The power cords should be routed such that they are not likely to be stepped on. A damaged power cord can cause fire or give you an electrical shock. Check the power cord once in a while. When you find it damaged, ask your nearest PIONEER authorized service center or your dealer for a replacement.